THE CITY OF ROCKFORD ILLINOIS, USA

Carrie Eklund
Central Services Manager
Finance Department

INVITATION TO BID
GRANULAR ACTIVATED CARBON REPLACEMENT
BID NO.: 712-W-092

7/26/12

Name of Bidding Firm: _____

Address _____ City: _____ State: ____ Zip: _____

Phone: _____ Fax: _____

E-Mail: _____

Bid Opening Time and Date 11:00 a.m., Local Time, Wednesday, August 15, 2012

Bids will be accepted until the specified opening time and date. Any bidder attempting to deliver after the opening time and date will be refused.

Bid Deposit/Bid Bond:	YES
Prevailing Wage	YES
Performance Bond:	NO

PLEASE MARK THE RETURN SEALED ENVELOPE:

1. Bid Opening Date and Time
2. Title of Job
3. Bid Number

RETURN BIDS TO:

City of Rockford
Central Services Manager
425 East State Street, 4th Floor
Rockford, Illinois 61104
Telephone: (815) 987-5560

BIDS SUBMITTED BY FASCSIMILE OR E-MAIL WILL NOT BE ACCEPTED

BID RESULTS:

Bid results may be obtained by telephone at (815) 987-5560, by fax at (800) 380-7174. or at www.rockfordil.gov

CITY OF ROCKFORD, ILLINOIS—BIDDING GENERAL CONDITIONS

1. Pricing. The bidder shall insert price for all bid items and all other information requested in these specifications. The price shall be the *full, delivered cost* to the City of Rockford with no additions.

2. Total versus "Per Item" Awards. The City generally awards contracts based on a lump sum basis to the lowest responsible and responsive bidder. However, the City may choose to award on a per item basis. Therefore, each bidder must submit pricing for each item indicated on the bid forms. Bidders must clearly indicate which items are bid and which are not.

3. Delivery of Merchandise. Delivery terms will always be Freight On Board (FOB)–Destination. The City of Rockford accepts no responsibility for the condition of any merchandise purchased prior to acceptance by City Personnel. Failure to comply with this requirement may constitute rejection of the bid.

4. Acceptance of Merchandise at Delivery. The City of Rockford reserves the right to refuse acceptance of delivered merchandise that differs substantially from the specifications in this invitation to bid or as otherwise permitted by Illinois law.

5. Prompt Payment Act. The City of Rockford intends to comply with the governmental prompt payment act. The awarded vendor will be paid upon submission of invoices to: City of Rockford Accounts Payable, 425 East State Street, Rockford, IL 61104.

6. W-9 Request for Taxpayer Identification Number. Prior to issuance of a purchase order, the successful bidder will be required to supply the City of Rockford with a federal W-9 Request for Taxpayer Identification Number and Certification. Failure to comply with this requirement will be considered a violation of contract terms, for which the City may bar the vendor from bidding for a period of up to three years.

7. Legal Compliance. The vendor awarded this contract will comply with all Federal, State, County, and City laws, ordinances, rules and regulations, which in any manner affect the product or service placed for bid herein. Lack of knowledge on the part of the awarded vendor of applicable law will in no way be cause for release of this obligation. If the City becomes aware of violation of any laws, ordinances, rules and regulations on the part of the awarded vendor, it reserves the right to reject any bid, cancel any contract, and pursue any other legal remedies deemed necessary.

8. Legal Requirements. This contract sets forth the entire final agreement between the City of Rockford and the bidder and shall govern the respective duties and obligations of the parties. The validity of this contract, and any disputes arising from the contract, shall be governed by the laws of the State of Illinois. Any litigation under this agreement shall be resolved in the trial courts of Winnebago County, State of Illinois. Should a provision of this contract be declared invalid by a court of competent jurisdiction, it shall not affect the validity of the remaining provisions of the contract.

9. Safety. Prevention of accidents at any project is the sole responsibility of the awarded vendor and its subcontractors, agents, and employees. The awarded vendor, its subcontractors, agents, and employees shall be fully and solely responsible for the safety of this project. The awarded vendor shall retain exclusive and direct control over the acts or omissions of its subcontractors, agents and employees, and any other persons performing portions of the work and not directly employed by the awarded vendor.

10. Criminal Background Check. When necessary for the protection of citizens and/or City staff, the City may require an awarded vendor to conduct a criminal background check on all of its personnel who will have direct contact with City facilities or residents/businesses served under this contract. Personnel are defined as representatives, agents, employees, subcontractors, or anyone else who will be utilized to fulfill obligations under this contract. Criminal background checks, at a minimum, shall consist of a county level felony and misdemeanor check for each county in which the personnel resided in the last 10 years. The awarded vendor shall notify the City of any of its personnel who have been convicted of a felony or misdemeanor prior to commencing any work under this contract. At the City's discretion, personnel with any felony or misdemeanor convictions which raise a concern about the safety of building, property, or City staff/resident's personal security, or is otherwise job related (as determined by the City) shall not perform work under this contract. Once given notice that a background check(s) will be required, it must be completed within 14 calendar days so as to not delay work to be completed.

11. Control of the Work. With respect to the awarded vendor's own work, the City shall not have contractual, operational, and/or supervisory control over and/or charge of the work and shall not be responsible for construction means, methods, techniques, sequences, procedures, and programs in connection with the awarded vendor's work, since these are solely the vendor's responsibility under the agreement. The City shall not be responsible for the awarded vendor's failure to carry out the work in accordance with the agreement's terms and conditions. The City shall not have control over and/or charge of acts or omissions of the awarded vendor, its subcontractors, and/or their agents or employees, or any other person performing portions of the work not directly employed by the awarded vendor. The awarded vendor shall be considered to be an "independent contractor" pursuant to Illinois law.

12. Bid Bond. When required on the cover sheet, a bid bond for not less than 5 percent of the bid amount must accompany all bids as a guarantee that if the bid is accepted, the bidder will execute and file the proper contract. A bank cashier's check, bank draft, or certified check equal to the amount specified is acceptable in lieu of a bid bond. Bid bonds of the two lowest firms will be retained until the contract is awarded.

13. Performance Bond. When required by the specifications herein, the awarded vendor shall furnish a performance bond equal to the amount of the contract, acceptable to the City, within 14 calendar days after notification of contract award. Failure to furnish the required bond within the time specified may be cause for rejection of the bid and any bid deposit may be retained by the City as liquidated damages and not as a penalty.

14. Taxes. No charge will be allowed for taxes from which the City of Rockford, Illinois is exempt. The City of Rockford, Illinois is not liable for the Illinois Retailers' Occupation Tax, the Service Occupation Tax or the Service Use Tax. The City is exempt from the Federal Excise and Transportation Tax.

15. Withdrawal of Bids. Firms may withdraw or cancel their bids at any time prior to the advertised invitation to bid opening. After the opening time, no bid shall be withdrawn or cancelled. All bids shall be firm and valid for a period of sixty (60) calendar days. If a bidder to whom a contract is awarded refuses to accept the award, the City may, at its discretion, suspend the bidder for a period of time up to three (3) years.

16. Subcontracting. The bidder shall provide information for all subcontractors, leased operators/equipment, and suppliers and all other information requested in the Subcontractor and Supplier Detail Forms attached. Requests for deviations from the completed detail forms submitted must be made in writing, and reviewed and approved by the City's Diversity Procurement Officer and the Central Services Manager or designee. The awarded vendor may not subcontract any portion of the contract after award without written consent of the City of Rockford

Central Services Manager. When subcontractors are used, the awarded vendor is required to pay subcontractors promptly after completion of work. Delay of payment is prohibited.

17. Termination of Contract. The City of Rockford reserves the right to terminate the contract in its entirety or in portions, upon written notice to the awarded vendor, if the Rockford City Council does not appropriate sufficient funds to complete the contract or in the event of default by the awarded vendor. Default is defined as failure of the awarded vendor to perform any of the provisions of this contract or failure to make sufficient progress so as to endanger performance of this contract in accordance with its terms. In the event of default, the City may purchase the product(s) and/or service(s) from other sources and hold the defaulting company responsible for any excess costs occasioned thereby. The City may require payment of liquidated damages for non-performance. Should default be due to failure to perform or because of a request for a price increase, the City reserves the right to remove the firm from the City's bidder list for a period of up to three years.

18. Late Bids and Proposals. Regardless of cause, late bids and proposals will not be accepted and will automatically be disqualified from further consideration. It shall be solely the vendor's risk to ensure delivery at the designated office by the designated time. Late bids and proposals will not be opened and may be returned to the awarded vendor at their request and expense.

19. EEO Forms. Each firm shall be required to submit with its bid information all EEO forms included in the invitation to bid package. Any bid which fails to include the properly completed compliance items will not be read and will not be considered. All subcontractors shall also be required to comply with the same EEO forms as the firm.

20. Restrictive or Ambiguous Specifications. It is the responsibility of the bidding firm to review the invitation to bid specifications and to notify the Central Services Manager if the specifications are formulated in a manner that would unnecessarily restrict competition. Any such protest or question regarding the specifications or invitation to bid procedures must be received by the Central Services Division not less than seventy-two hours prior to the time set for the opening. In the event a contract term is not defined within the contract document, the term will be given its ordinary dictionary definition.

21. Bid Protest. Firms wishing to protest bids or awards shall notify the Central Services Manager in writing within 7 days after the invitation to bid opening. The notification should include the bid number, the name of the firm protesting, and the reason why the firm is protesting the bid. The Central Services Manager will respond to the protest within seven (7) calendar days. A successful protest may result in the reversal of a previously awarded contract.

22. Disputes. In case of disputes as to whether or not an item or service quoted or delivered meets specifications, the decision of the Central Services Manager, or authorized representative shall be final and binding to all parties. The Central Services Manager has the right to waive technicalities as they see fit. The Central Services Manager may request a written recommendation from the head of the department using the equipment or service being procured.

23. Exceptions. Any deviations from these specifications shall be noted and submitted with the bid. Failure to address deviations from specifications may result in bid rejection.

24. Acceptance/Rejection of Bids. The City of Rockford reserves the right to accept or reject any or all bids or proposals at any time, for any reason, including but not limited to the Rockford City Council not appropriating

sufficient funds to purchase equipment or complete the contract. The City may make awards in any manner deemed in the best interest of the City.

25. Prevailing Wage. When indicated on the cover page of this document, this contract calls for the construction of a "public work," within the meaning of the Illinois Prevailing Wage Act, 820 ILCS 130/.01 *et seq.* ("the Act"). The Act requires awarded vendors and subcontractors to pay laborers, workers, and mechanics performing services on public works projects no less than the "prevailing rate of wages" (hourly cash wages plus fringe benefits) in the county where the work is performed. When required, awarded vendors are responsible for paying current prevailing wage rates, as posted on the Illinois Department of Labor's website at: http://www.state.il.us/agency/idol/rates/rates.HTM. It is the awarded vendor's responsibility to verify current wage rates, as they are updated monthly. All awarded vendors and subcontractors rendering services under this contract must comply with all requirements of the Act, including but not limited to, all wage, notice, and record keeping duties.

26. Certified Payroll. All Certified Payroll reports required to be submitted under the Prevailing Wage Act, 820 ILCS 130, must be submitted monthly via email, in Excel or some format compatible with Excel, to certified.payroll@rockfordil.gov.

27. Substance Abuse Prevention. When required by Illinois State Statutes, awarded vendors must have in place and file with the City a written program for prevention of substance abuse among its employees. This program must include pre-hire, random, reasonable suspicion, and post-accident drug and alcohol testing, as required by the Substance Abuse Prevention on Public Works Projects Act.

28. Apprenticeship Requirement. For construction contracts over $50,000, awarded vendors must participate in apprenticeship and training programs approved and registered with the United States Department of Labor's Bureau of Apprenticeship and Training for all Trades that will be in the awarded vendor's (or his subcontractor's) employment, with each worker receiving the required apprenticeship/training appropriate to his trade. Owners or work performed by owners is not exempt from the apprenticeship and training requirement.

29. Indemnification. To the fullest extent permitted by law, the awarded vendor shall indemnify and hold harmless the City, its officers, representatives, elected and appointed officials, agents, and employees from and against all claims, damages, losses and expenses, including but not limited to attorney's fees, arising out of or resulting from the awarded vendor's performance of work under this agreement, and indemnifies and agrees to defend and hold harmless the City against any and all losses, claims, damages, and expenses arising from the work performed hereunder of the erection, construction, placement, or operation of any scaffold, hoist, crane, stay, ladder, support, or other mechanical contrivance in connection with such work including but not limited to losses, claims, damages, and expenses arising pursuant to claims asserted against the City pursuant to theories premised upon section 414 of the Restatement (Second) of Torts and section 343 of the Restatement (Second) of Torts.

This indemnification agreement shall not be limited in any way by any limitations on the amount or type of damages, compensation, or benefits payable by or for the awarded vendor under Worker's Compensation Acts, disability benefit acts, or other employee benefit acts, and serves as an express agreement to waive the protection of Kotecki v. Cyclops Welding Corp., 146 Ill.2d 155, 585 N.E.2d 1023 (1991) in Illinois.

Further, the awarded vendor agrees that it is solely responsible for compliance with all safety laws applicable to the work performed hereunder, including but not limited to the Occupational Safety and Health Act of 1970 and the Construction Safety Act of 1960 and all standards and regulations which have been or shall be promulgated by the agencies which administer the Acts.

Under no circumstances shall the awarded vendor, its subcontractors, agents, and employees be required to indemnify the City for its own negligence.

30. Officers. Each bidder affirms, by submission of a response to this bid or request for proposals, that no officer of the City of Rockford, Illinois, is directly or indirectly interested in the proposal for any reason of personal gain.

31. Non-Waiver. The failure by the City to require performance of any provision shall not affect the City's right to require performance at any time thereafter, nor shall a waiver of any breach or default of this contract constitute a waiver of any subsequent breach or default or a waiver of the provision itself.

32. Professional Services Selection Act. The City of Rockford intends to comply with 50 ILCS 510/5 governing the selection of professional services. Any reference in these terms and conditions to supplying pricing or price as a determining factor in selection do not apply for services covered by said act.

33. The City of Rockford reserves the right to accept or reject any and all proposals and to waive technicalities in submitted bids.

BID REQUIREMENTS FOR
EQUAL EMPLOYMENT OPPORTUNITY

All bidders seeking to do business with the City of Rockford are **REQUIRED** to submit with any formal, sealed bid all of the following documents and information, attached herewith, completed and signed:

1. Equal Employment Opportunity Affirmative Action Plan Statement of Policy.

2. The Statement of Non-Compliance and Certificate of Non-Segregated Facilities.

3. The Contractor or Vendor Workforce Data Form listing all current employees, by classification, directly employed by the bidder. All categories of information requested must be supplied.
   Note: The number of employees must be entered under each category (no check marks)

   Below are the Federal definitions of the following racial groups accepted as minorities by the City of Rockford:
   Black: A person having origins in any of the Black racial groups of Africa, not of Hispanic origin.
   Hispanic: A person of Spanish or Portuguese culture with origins in Mexico, South or Central America, or the Caribbean Islands, regardless of race.
   Asian: A person having origins in any of the original peoples of the Far East, Southeast Asia, the Indian subcontinent, or the Pacific Islands. This area includes for example, China, Japan, Korea, the Philippine Republic and Samoa.
   American Indian or Alaskan Native: A person having origins in any of the original peoples of North America.

4. Your State of Illinois Pre-Qualification Certification Number, issued by the Illinois Department of Human Rights for the Illinois Department of Human Rights Act, must provide expiration date entered in the place provided therefore.

5. Certificate of Non-Barred Bidding

6. All executed Subcontractor/Leased Operator and Supplier forms.

If you have not obtained your State of Illinois Pre-Qualification Number (item #4), by signing these documents you agree to make application for this number within 30 days from the date of bid opening.

ANY BID WHICH FAILS TO INCLUDE THE CITY OF ROCKFORD EEO PAGES 2, 4, 5, 6, AND 7, COMPLETED AND SIGNED WITH YOUR SEALED BID WILL NOT BE READ AND WILL NOT BE CONSIDERED – NO EXCEPTIONS.

Falsification of any required Equal Employment Opportunity or Affirmative Action information on the part of the bidder could result in rejection of the bid submitted or in the case where a contract has already been awarded, in the cancellation of said contract.

Any questions pertaining to E.E.O. requirements should be addressed to Ron Moore, Diversity Procurement Officer, Legal Department, 425 East State Street, Rockford, Illinois 61104, Phone: (815) 987-5622 or ron.moore@rockfordil.gov

EQUAL EMPLOYMENT OPPORTUNITY
AFFIRMATIVE ACTION PLAN
STATEMENT OF POLICY

It is the policy of this company, _____ to provide equal employment opportunity without regard to race, religion, color, national origin, handicap, age or sex through a program of positive action affecting all employees. In this program, our company carries out the requirements of Federal Executive orders 11246 and 11375, Civil Rights Act of 1964, Equal Employment Act of 1972, and all other applicable laws, and indicates its active support of the principle of equal opportunity in employment.

At present, _____ % of our work force are minorities and _____ % of our work force are females, and we will attempt to utilize minorities and females through a positive, continuing program in all jobs for which we contract in the future. Our company will utilize referrals from the City of Rockford's Diversity Procurement Officer for use of minorities and females regarding any future job vacancies.

It is also our intent to make efforts to purchase supplies or equipment from small business concerns located in the City of Rockford or counties of Winnebago or Boone and owned in substantial part (at least 51 per cent) by minorities or females.

_____ is the official who will be responsible for implementing this policy statement.

_____ will be designated as the Equal Opportunity Officer in our company, responsible for submission of all required equal employment opportunity documents.

In addition, _____ is hereby authorized to sign payroll as well as this company's officers. (NOTE: If only officers will be authorized to sign payrolls, please fill in "No One" in this space.)

STATEMENT OF NONCOMPLIANCE

If the equal employment opportunity hearing committee determines that a contractor, subcontractor/leased operator of equipment or bidder is not in compliance with this chapter, (also known as Chapter 11, Article III the City of Rockford Equal Opportunity Employment Ordinance), the hearing committee shall issue and serve upon such person a written statement of noncompliance setting forth the manner in which it finds such person has violated this chapter, and imposing and/or requiring appropriate sanctions, including, but not limited to any and/or all of the following:

a. Denying, suspending or revoking qualifications, or declaring the contractor or subcontractor irresponsible and ineligible for future contracts or subcontracts until such time as the contractor or subcontractor shall demonstrate to the equal employment opportunity hearing committee that it is in compliance;

b. Withholding or delaying payment on the contractor or;

c. Suspending, avoiding or canceling contract work.

CERTIFICATION OF NON-SEGREGATED FACILITIES

The bidder certifies that he/she does not maintain or provide for his/her employees any segregated facilities at any of his/her establishments, and that he/she does not permit his/her employees to perform their services at any location, under his/her control, where segregated facilities are maintained. The bidder agrees that a breach of this certification will be a violation of the Equal Opportunity clause in any contract resulting from acceptance of this bid.

The bidder agrees that (except where he/she has obtained identical certification from proposed subcontractors/leased operators of equipment for specific time periods) he/she will obtain identical certification from proposed subcontractors/leased operators of equipment from the provisions of the Equal Opportunity clause, and that he/she will retain such certification in his/her files.

CONTRACTOR OR VENDOR WORKFORCE DATA FORM

BIDDERS NAME:

NUMBER OF ALL EMPLOYEES MUST BE ENTERED FOR EACH CATEGORY ---
(No Check Marks Or Bid Will Not Be Accepted)

	MALES					FEMALES				
ALL JOB CLASSIFICATIONS	**W**	**B**	**H**	**A**	**I**	**W**	**B**	**H**	**A**	**I**

W - WHITE B - BLACK H – HISPANIC A - ASIAN OR PACIFIC ISLANDER I - AMERICAN INDIAN

ILLINOIS DEPARTMENT OF HUMAN RIGHTS CERTIFICATION

Our Illinois Department of Human Rights Number is:

Must Provide Expiration Date:

CERTIFICATE OF NON-BARRED BIDDING

The undersigned certifies that it is not barred from bidding on this contract as a result of a conviction for the violation of State laws prohibiting bid rigging or bid rotating. The undersigned also certifies that current or prospective employees, contractors, and subcontractors/leased operators of equipment are not listed as Excluded Individuals/Entities with the US Government, as maintained by the US General Services Administration.

By signing below, the firm agrees that all information provided in the previous pages is accurate, and that if the firm below does not currently have a Department of Human Rights number they will apply for one within thirty days with the State of Illinois.

_____
Authorized Signature

_____
Title

_____
Firm

Our firm is a:

Minority Business Enterprise	_____	City-Certified?	Yes	____	No	____
Women Business Enterprise	_____	City Certified?	Yes	____	No	____
Neither	_____					

(Revised 12/21/09)

Subcontractor/Leased Operator of Equipment Detail Form
City of Rockford

Firms submitting bids must supply information on Subcontractors/Leased Operators of Equipment selected for work on the project specified. It is required that Subcontractors/Leased Operators of Equipment listed below will be utilized for actual construction should the firm be awarded a contract. Any deviations from the list below require notice in writing and approval by the Diversity Procurement Officer, Central Services Manager, or their designee. This form may be duplicated if additional space is necessary, **all pages must be signed, and submitted.**

Subcontractor/Leased Operator Information Please provide business name and address, and a contact person.	**Type of Work Supplied** Describe the work the subcontractor/leased operator will perform for this contract.	**MBE/WBE Business?**	**Dollar Amount**	**Subcontract Percent of Bid Total**
Name _____ *Address* _____ *City, State* _____ *Contact* _____	_____	Y ☐ N ☐	$ _____	_____ %
Name _____ *Address* _____ *City, State* _____ *Contact* _____	_____	Y ☐ N ☐	$ _____	_____ %
Name _____ *Address* _____ *City, State* _____ *Contact* _____	_____	Y ☐ N ☐	$ _____	_____ %
Name _____ *Address* _____ *City, State* _____ *Contact* _____	_____	Y ☐ N ☐	$ _____	_____ %
Name _____ *Address* _____ *City, State* _____ *Contact* _____	_____	Y ☐ N ☐	$ _____	_____ %
Name _____ *Address* _____ *City, State* _____ *Contact* _____	_____	Y ☐ N ☐	$ _____	_____ %

The bidder intends to Subcontract/Lease Operators of Equipment for _____% of the total contract with MBE/WBE firms.

_____ _____ _____

Signed Title Date

Supplier Detail Form
City of Rockford

Firms submitting bids must supply information on suppliers selected for the project specified. It is required that suppliers listed below will be utilized during construction should the firm be awarded a contract. Any deviations from the list below require notice in writing and approval by the Diversity Procurement Officer, Central Services Manager, or their designee. This form may be duplicated if additional space is necessary, **all pages must be signed, and submitted.**

Supplier Information Please provide business name and address, and a contact person.	**Type of Product Supplied** Describe the product the supplier w provide for this contract.	**MBE/WBE Business?**	**Dollar Amount of Supply Contract**	**Supplier Percent of Bid Total**
Name _____ *Address* _____ *City, State* _____ *Contact* _____	_____	Y ☐ N ☐	$ _____	_____ %
Name _____ *Address* _____ *City, State* _____ *Contact* _____	_____	Y ☐ N ☐	$ _____	_____ %
Name _____ *Address* _____ *City, State* _____ *Contact* _____	_____	Y ☐ N ☐	$ _____	_____ %
Name _____ *Address* _____ *City, State* _____ *Contact* _____	_____	Y ☐ N ☐	$ _____	_____ %
Name _____ *Address* _____ *City, State* _____ *Contact* _____	_____	Y ☐ N ☐	$ _____	_____ %
Name _____ *Address* _____ *City, State* _____ *Contact* _____	_____	Y ☐ N ☐	$ _____	_____ %

The bidder intends to procure _____% of the total contract from MBE/WBE firms.

Signed _____ Title _____ Date _____

Winnebago County Prevailing Wage for July 2012

(See explanation of column headings at bottom of wages)

Trade Name	RG	TYP	C	Base	FRMAN	*M-F>8	OSA	OSH	H/W	Pensn	Vac	Trng
ASBESTOS ABT-GEN		BLD		29.580	30.580	1.5	1.5	2.0	8.240	12.32	0.000	0.800
ASBESTOS ABT-MEC		BLD		18.950	0.000	1.5	1.5	2.0	2.700	3.350	0.000	0.000
BOILERMAKER		BLD		43.450	47.360	2.0	2.0	2.0	6.970	14.66	0.000	0.350
BRICK MASON		BLD		35.880	38.630	1.5	1.5	2.0	7.950	11.73	0.000	0.600
CARPENTER		BLD		36.320	40.320	1.5	1.5	2.0	7.400	10.95	0.000	0.600
CARPENTER		HWY		37.280	39.030	1.5	1.5	2.0	7.400	9.000	0.000	0.490
CEMENT MASON		ALL		34.820	37.570	1.5	1.5	2.0	8.150	11.45	0.000	0.500
CERAMIC TILE FNSHER		BLD		32.410	0.000	1.5	1.5	2.0	7.700	4.840	0.000	0.530
COMMUNICATION TECH		BLD		36.000	39.600	1.5	1.5	2.0	10.14	11.20	0.000	0.720
ELECTRIC PWR EQMT OP		ALL		35.400	48.110	1.5	1.5	2.0	5.000	10.97	0.000	0.270
ELECTRIC PWR GRNDMAN		ALL		27.380	48.110	1.5	1.5	2.0	5.000	8.490	0.000	0.210
ELECTRIC PWR LINEMAN		ALL		42.390	48.110	1.5	1.5	2.0	5.000	13.14	0.000	0.320
ELECTRIC PWR TRK DRV		ALL		28.350	48.110	1.5	1.5	2.0	5.000	8.790	0.000	0.220
ELECTRICIAN		BLD		40.000	44.000	1.5	1.5	2.0	10.14	16.93	0.000	0.800
ELEVATOR CONSTRUCTOR		BLD		44.940	50.560	2.0	2.0	2.0	11.03	11.96	2.760	0.000
GLAZIER		BLD		34.730	35.730	1.5	1.5	2.0	9.700	8.200	0.000	1.250
HT/FROST INSULATOR		BLD		33.930	36.470	1.5	1.5	2.0	7.450	14.77	0.000	0.000
IRON WORKER		ALL		35.090	36.840	2.0	2.0	2.0	8.250	20.59	0.000	0.700
LABORER		BLD		29.580	30.580	1.5	1.5	2.0	8.240	12.32	0.000	0.800
LABORER		HWY		31.950	32.700	1.5	1.5	2.0	8.240	12.50	0.000	0.800
LABORER, SKILLED		HWY		34.250	35.000	1.5	1.5	2.0	8.240	12.50	0.000	0.800
LATHER		BLD		36.320	40.320	1.5	1.5	2.0	7.400	10.95	0.000	0.600
MACHINIST		BLD		43.160	45.160	1.5	1.5	2.0	7.980	8.950	0.000	0.000
MARBLE FINISHERS		BLD		32.410	0.000	1.5	1.5	2.0	7.700	4.840	0.000	0.530
MARBLE MASON		BLD		35.090	35.340	1.5	1.5	2.0	7.700	7.150	0.000	0.560
MATERIAL TESTER I		ALL		21.550	0.000	1.5	1.5	2.0	7.460	4.840	0.000	0.170
MATERIALS TESTER II		ALL		26.550	0.000	1.5	1.5	2.0	7.460	4.840	0.000	0.170
MILLWRIGHT		BLD		35.000	38.500	1.5	1.5	2.0	7.700	13.87	0.000	0.500
OPERATING ENGINEER		BLD	1	40.350	44.350	2.0	2.0	2.0	14.55	9.300	2.350	1.300
OPERATING ENGINEER		BLD	2	39.650	44.350	2.0	2.0	2.0	14.55	9.300	2.350	1.300
OPERATING ENGINEER		BLD	3	37.200	44.350	2.0	2.0	2.0	14.55	9.300	2.350	1.300
OPERATING ENGINEER		BLD	4	35.200	44.350	2.0	2.0	2.0	14.55	9.300	2.350	1.300
OPERATING ENGINEER		BLD	5	44.100	44.350	2.0	2.0	2.0	14.55	9.300	2.350	1.300
OPERATING ENGINEER		BLD	6	43.350	44.350	2.0	2.0	2.0	14.55	9.300	2.350	1.300
OPERATING ENGINEER		BLD	7	40.350	44.350	2.0	2.0	2.0	14.55	9.300	2.350	1.300
OPERATING ENGINEER		HWY	1	40.200	44.200	1.5	1.5	2.0	14.55	9.300	2.350	1.300
OPERATING ENGINEER		HWY	2	39.650	44.200	1.5	1.5	2.0	14.55	9.300	2.350	1.300
OPERATING ENGINEER		HWY	3	38.350	44.200	1.5	1.5	2.0	14.55	9.300	2.350	1.300
OPERATING ENGINEER		HWY	4	36.900	44.200	1.5	1.5	2.0	14.55	9.300	2.350	1.300
OPERATING ENGINEER		HWY	5	35.450	44.200	1.5	1.5	2.0	14.55	9.300	2.350	1.300
OPERATING ENGINEER		HWY	6	43.200	44.200	1.5	1.5	2.0	14.55	9.300	2.350	1.300
OPERATING ENGINEER		HWY	7	41.200	44.200	1.5	1.5	2.0	14.55	9.300	2.350	1.300
PAINTER		ALL		35.700	37.700	1.5	1.5	1.5	9.650	8.460	0.000	1.250
PILEDRIVER		BLD		37.320	41.430	1.5	1.5	2.0	7.400	10.95	0.000	0.600
PILEDRIVER		HWY		37.280	39.030	1.5	1.5	2.0	7.400	9.000	0.000	0.490
PIPEFITTER		BLD		39.900	42.690	1.5	1.5	2.0	7.980	10.69	0.000	1.000
PLASTERER		BLD		33.360	36.700	1.5	1.5	2.0	8.150	11.05	0.000	0.500
PLUMBER		BLD		39.900	42.690	1.5	1.5	2.0	7.980	10.69	0.000	1.000
ROOFER		BLD		38.350	41.350	1.5	1.5	2.0	8.080	8.220	0.000	0.430
SHEETMETAL WORKER		BLD		35.780	37.710	1.5	1.5	2.0	5.450	15.44	0.520	0.290
SPRINKLER FITTER		BLD		36.390	39.140	1.5	1.5	2.0	8.420	8.350	0.000	0.350
STONE MASON		BLD		35.880	38.630	1.5	1.5	2.0	7.950	11.73	0.000	0.600

TERRAZZO FINISHER	BLD	32.410	0.000	1.5	1.5	2.0	7.700	4.840	0.000	0.530
TERRAZZO MASON	BLD	35.090	35.340	1.5	1.5	2.0	7.700	7.150	0.000	0.560
TILE LAYER	BLD	36.320	40.320	1.5	1.5	2.0	7.400	10.95	0.000	0.600
TILE MASON	BLD	35.090	35.340	1.5	1.5	2.0	7.700	7.150	0.000	0.560
TRUCK DRIVER	ALL 1	32.960	33.420	1.5	1.5	2.0	6.900	8.220	0.000	0.000
TRUCK DRIVER	ALL 2	33.110	33.420	1.5	1.5	2.0	6.900	8.220	0.000	0.000
TRUCK DRIVER	ALL 3	33.310	33.420	1.5	1.5	2.0	6.900	8.220	0.000	0.000
TRUCK DRIVER	ALL 4	33.420	33.420	1.5	1.5	2.0	6.900	8.220	0.000	0.000
TUCKPOINTER	BLD	35.880	38.630	1.5	1.5	2.0	7.950	11.73	0.000	0.600

Legend:

RG (Region)
TYP (Trade Type - All,Highway,Building,Floating,Oil & Chip,Rivers)
C (Class)
Base (Base Wage Rate)
FRMAN (Foreman Rate)
M-F>8 (OT required for any hour greater than 8 worked each day, Mon through Fri.
OSA (Overtime (OT) is required for every hour worked on Saturday)
OSH (Overtime is required for every hour worked on Sunday and Holidays)
H/W (Health & Welfare Insurance)
Pensn (Pension)
Vac (Vacation)
Trng (Training)

Explanations

WINNEBAGO COUNTY

The following list is considered as those days for which holiday rates of wages for work performed apply: New Years Day, Memorial Day, Fourth of July, Labor Day, Thanksgiving Day, Christmas Day and Veterans Day in some classifications/counties. Generally, any of these holidays which fall on a Sunday is celebrated on the following Monday. This then makes work performed on that Monday payable at the appropriate overtime rate for holiday pay. Common practice in a given local may alter certain days of celebration. If in doubt, please check with IDOL.

EXPLANATION OF CLASSES

ASBESTOS - GENERAL - removal of asbestos material/mold and hazardous materials from any place in a building, including mechanical systems where those mechanical systems are to be removed. This includes the removal of asbestos materials/mold and hazardous materials from ductwork or pipes in a building when the building is to be demolished at the time or at some close future date.
ASBESTOS - MECHANICAL - removal of asbestos material from mechanical systems, such as pipes, ducts, and boilers, where the mechanical systems are to remain.

CERAMIC TILE FINISHER, MARBLE FINISHER, TERRAZZO FINISHER

Assisting, helping or supporting the tile, marble and terrazzo mechanic by performing their historic and traditional work assignments required to complete the proper installation of the work covered by said crafts. The term "Ceramic" is used for naming the classification only and is in no way a limitation of the product handled. Ceramic takes into consideration most hard tiles.

COMMUNICATIONS TECHNICIAN

Installing, manufacturing, assembling and maintaining sound and intercom, protection alarm (security), fire alarm, master antenna television, closed circuit television, low voltage control for computers and/or door monitoring, school communications systems, telephones and servicing of nurse and emergency calls, and the installation and maintenance of transmit and receive antennas, transmitters, receivers, and associated apparatus which operates in conjunction with above systems. All work associated with these system installations will be included EXCEPT the installation of protective metallic conduit in new construction projects (excluding less than ten-foot, runs strictly for protection of cable) and 120 volt AC (or higher) power wiring and associated hardware.

LABORER, SKILLED - HIGHWAY

Individuals engaged in the following types of work, irrespective of the site of the work: asbestos abatement worker, handling of any materials with any foreign matter harmful to skin or clothing, track laborer, cement handlers, chloride handlers, the unloading and loading with steel workers and re-bars, concrete workers wet, tunnel helpers in free air, batch dumpers, mason tenders, kettle and tar men, tank cleaners, plastic installers, scaffold workers, motorized buggies or motorized unit used for wet concrete or handling of building materials, laborers with de-watering systems, sewer workers plus depth, rod and chainmen with technical engineers, rod and chainmen with land surveyors, rod and chainmen with surveyors, vibrator operators, cement silica, clay, fly ash, lime and plasters, handlers (bulk or bag), cofferdam workers plus depth, on concrete paving, placing, cutting and tying of reinforcing, deck hand, dredge hand, and shore laborers, bankmen on floating plant, grade checker, power tools, front end man on chip spreaders, cassion workers plus depth, gunnite nozzle men, lead man on sewer work, welders, cutters, burners and torchmen, chainsaw operators, jackhammer and drill operators, layout man and/or drainage tile layer, steel form setter - street and highway, air tamping hammermen, signal man on crane, concrete saw operator, screedman on asphalt pavers, laborers tending masons with hot material or where foreign materials are used, mortar mixer operators, multiple concrete duct - leadsman, lumen, asphalt raker, curb asphalt machine operator, ready mix scalemen (permanent, portable or temporary plant), laborers handling masterplate or similar materials, laser beam operator, con-crete burning machine operator, coring machine operator, plaster ten-der, underpinning and shoring of buildings, pump men, manhole and catch basin, dirt and stone tamper, hose men on concrete pumps, haz-ardous waste worker, lead base paint abatement worker, lining of pipe, refusing machine, assisting on direct boring machine, the work of lay-ing watermain, fire hydrants, all mechanical joints to watermain work, sewer worker, and tapping water service and forced lift station mechanical worker.

MATERIAL TESTER I: Hand coring and drilling for testing of materials; field inspection of uncured concrete and asphalt.

MATERIAL TESTER II: Field inspection of welds, structural steel, fireproofing, masonry, soil, facade, reinforcing steel, formwork,

cured concrete, and concrete and asphalt batch plants; adjusting proportions of bituminous mixtures.

OPERATING ENGINEERS - BUILDING

Class 1. Asphalt Plant; Asphalt Spreader; Autograde; Backhoes with Caisson Attachment; Batch Plant; Benoto (requires Two Engineers); Boiler and Throttle Valve; Caisson Rigs; Central Redi-Mix Plant; Combination Back Hoe Front End-loader Machine; Compressor and Throttle Valve; Concrete Breaker (Truck Mounted); Concrete Conveyor; Concrete Paver (over 27E cu. ft.): Concrete Paver (27 cu. ft. and under); Concrete Placer; Concrete Pump (Truck Mounted); Concrete Conveyor (Truck Mounted); Concrete Tower; Cranes, All; GCI and similar types (required two operators only); Cranes, Hammerhead; Creter Crane; Crusher, Stone, etc.; Derricks, All; Derricks, Traveling; Formless Curb and Gutter Machine; Grader, Elevating; Grouting Machines; Highlift Shovels or Front Endloader 2-1/4 yd. and over; Hoists, Elevators, outside type rack and pinion and similar machines; Hoists, one, two and three Drum; Hoists, Two Tugger One Floor; Hydraulic Backhoes; Hydraulic Boom Trucks; Locomotives, All; Lubrication Technician; Manipulators; Motor Patrol; Pile Drivers and Skid Rig; Post Hole Digger; Pre-Stress Machine; Pump Cretes Dual Ram; Pump Cretes: Squeeze Cretes - Screw Type Pumps, Gypsum Bulker and Pump; Raised and Blind Hole Drill; Rock Drill (self-propelled); Rock Drill - Truck Mounted; Roto Mill Grinder; Scoops - Tractor Drawn; Slipform Paver; Scrapers Prime Movers; Straddle Buggies; Tie Back Machine; Tractor with Boom and Side Boom; Trenching Machines.

Class 2. Bobcat (over 3/4 cu. yd.); Boilers; Brick Forklift; Broom, All Power Propelled; Bulldozers; Concrete Mixer (Two Bag and Over); Conveyor, Portable; Forklift Trucks; Highlift Shovels or Front Endloaders under 2-1/4 yd.; Hoists, Automatic; Hoists, Sewer Dragging Machine; Hoists, Tugger Single Drum; Rollers, All; Steam Generators; Tractors, All; Tractor Drawn Vibratory Roller; Winch Trucks with "A" Frame.

Class 3. Air Compressor; Asphalt Spreader; Combination - Small Equipment Operator; Generators; Heaters, Mechanical; Hoists, Inside Elevators - (Rheostat Manual Controlled); Hydraulic Power Units (Pile Driving and Extracting); Pumps, Over 3" (1 to 3 not to exceed total of 300 ft.); Pumps, Well Points; Welding Machines (2 through 5); Winches, 4 Small Electric Drill Winches; Bobcat (up to and including 3/4 cu. yd.).

Class 4. Elevator push button with automatic doors; Hoists, Inside; Oilers; Brick Forklift.

Class 5. Assistant Craft Foreman

Class 6. Mechanics

Class 7. Gradall.

OPERATING ENGINEERS - HIGHWAY CONSTRUCTION

Class 1. Asphalt Plant; Asphalt Heater and Planer Combination; Asphalt Heater Scarfire; Asphalt Silo Tender; Asphalt Spreader; Autograder;

ABG Paver; Backhoes with Caisson Attachment; Ballast Regulator; Belt Loader; Caisson Rigs; Car Dumper; Central Redi-Mix Plant; Backhoe w/shear attachments; Combination Backhoe Front Endloader Machine, (1 cu. yd. Backhoe Bucket or over or with attachments); Concrete Breaker (Truck Mounted); Concrete Conveyor; Concrete Paver over 27E cu. ft.; Concrete Placer; Concrete Tube Float; Cranes, all attachments; Cranes, Tower of all types; Creter Crane; Crusher, Stone, etc.; Derricks, All; Derrick Boats; Derricks, Traveling; Directional Boring Machine over 12"; Dredges; Formless Curb and Gutter Machine; Grader, Elevating; Grader, Motor Grader, Motor Patrol, Auto Patrol, Form Grader, Pull Grader, Subgrader; Guard Rail Post Driver Mounted; Hoists, One, Two and Three Drum; Hydraulic Backhoes; Lubrication Technician; Manipulators; Pile Drivers and Skid Rig; Pre-Stress Machine; Pump Cretes Dual Ram; Rock Drill - Crawler or Skid Rig; Rock Drill - Truck Mounted; Rock/Track Tamper; Roto Mill Grinder; Slip-Form Paver; Soil Test Drill Rig (Truck Mounted); Straddle Buggies; GCI Crane; Hydraulic Telescoping Form (Tunnel); Tie Back Machine; Tractor Drawn Belt Loader; Tractor Drawn Belt Loader with attached pusher; Tractor with Boom; Tractaire with Attachments; Traffic Barrier Conveyor Machine; Raised or Blind Hole Drills; Trenching Machine (over 12"); Truck Mounted Concrete Pump with Boom; Truck Mounted Concrete Conveyor; Underground Boring and/or Mining Machines; Wheel Excavator; Widener (APSCO).

Class 2. Batch Plant; Bituminous Mixer; Boiler and Throttle Valve; Bulldozers; Car Loader Trailing Conveyors; Combination Backhoe Front Endloader Machine (less than 1 cu. yd. Backhoe Bucket or over or with attachments); Compressor and Throttle Valve; Compressor, Common Receiver (3); Concrete Breaker or Hydro Hammer; Concrete Grinding Machine; Concrete Mixer or Paver 7S Series to and including 27 cu. ft.; Concrete Spreader; Concrete Curing Machine, Burlap Machine, Belting Machine and Sealing Machine; Conveyor Muck Cars (Haglund or Similar Type); Drills, all; Finishing Machine - Concrete; Highlift Shovels or Front Endloader; Hoist - Sewer Dragging Machine; Hydraulic Boom Trucks (All Attachments); Hydro Blaster; All Locomotives, Dinky; Off-Road Hauling Units (including articulating) / 2 ton capacity or more; Non-Self Loading Ejection Dump; Pump Cretes: Squeeze Cretes - Screw Type Pumps, Gypsum Bulker and Pump; Roller, Asphalt; Rotary Snow Plows; Rototiller, Seaman, etc., self-propelled; Scoops - Tractor Drawn; Self-Propelled Compactor; Spreader - Chip - Stone, etc.; Scraper; Scraper - Prime Mover in Tandem (Regardless of Size); Tank Car Heater; Tractors, Push, Pulling Sheeps Foot, Disc, Compactor, etc.; Tug Boats.

Class 3. Boilers; Brooms, All Power Propelled; Cement Supply Tender; Compressor, Common Receiver (2); Concrete Mixer (Two Bag and Over); Conveyor, Portable; Farm-Type Tractors Used for Mowing, Seeding, etc.; Fireman on Boilers; Forklift Trucks; Grouting Machine; Hoists, Automatic; Hoists, All Elevators; Hoists, Tugger Single Drum; Jeep Diggers; Low Boys; Pipe Jacking Machines; Post-Hole Digger; Power Saw, Concrete Power Driven; Pug Mills; Rollers, other than asphalt; Seed and Straw Blower; Steam Generators; Stump Machine; Winch Trucks with "A" Frame; Work Boats; Tamper - Form - Motor Driven.

Class 4. Air Compressor - Small and Large; Asphalt Spreader, Backend Man; Bobcat (Skid Steer) all; Brick Forklift; Combination - Small Equipment Operator; Directional Boring Machine up to 12"; Generators; Heaters, Mechanical; Hydraulic Power Unit (Pile Driving, Extracting, or Drilling); Hydro-Blaster; Light Plants, All (1 through 5); Pumps,

over 3" (1 to 3 not to exceed a total of 300 ft.); Pumps, Well Points; Tractaire; Trencher 12" and under; Welding Machines (2 through 5); Winches, 4 Small Electric Drill Winches.

Class 5. Oilers and Directional Boring Machine Locator.

Class 6. Field Mechanics and Field Welders

Class 7. Gradall and machines of like nature.

TRUCK DRIVER - BUILDING, HEAVY AND HIGHWAY CONSTRUCTION
Class 1. Two or three Axle Trucks. A-frame Truck when used for transportation purposes; Air Compressors and Welding Machines, including those pulled by cars, pick-up trucks and tractors; Ambulances; Batch Gate Lockers; Batch Hopperman; Car and Truck Washers; Carry-alls; Fork Lifts and Hoisters; Helpers; Mechanics Helpers and Greasers; Oil Distributors 2-man operation; Pavement Breakers; Pole Trailer, up to 40 feet; Power Mower Tractors; Self-propelled Chip Spreader; Skipman; Slurry Trucks, 2-man operation; Slurry Truck Conveyor Operation, 2 or 3 man; TTeamsters Unskilled dumpman; and Truck Drivers hauling warning lights, barricades, and portable toilets on the job site.

Class 2. Four axle trucks; Dump Crets and Adgetors under 7 yards; Dumpsters, Track Trucks, Euclids, Hug Bottom Dump Turnapulls or Turnatrailers when pulling other than self-loading equipment or similar equipment under 16 cubic yards; Mixer Trucks under 7 yeards; Ready-mix Plant Hopper Operator, and Winch Trucks, 2 Axles.

Class 3. Five axle trucks; Dump Crets and Adgetors 7 yards and over; Dumpsters, Track Trucks, Euclids, Hug Bottom Dump Turnatrailers or turnapulls when pulling other than self-loading equipment or similar equipment over 16 cubic yards; Explosives and/or Fission Material Trucks; Mixer Trucks 7 yards or over; Mobile Cranes while in transit; Oil Distributors, 1-man operation; Pole Trailer, over 40 feet; Pole and Expandable Trailers hauling material over 50 feet long; Slurry trucks, 1-man operation; Winch trucks, 3 axles or more; Mechanic--Truck Welder and Truck Painter.

Class 4. Six axle trucks; Dual-purpose vehicles, such as mounted crane trucks with hoist and accessories; Foreman; Master Mechanic; Self-loading equipment like P.B. and trucks with scoops on the front.

Other Classifications of Work:

For definitions of classifications not otherwise set out, the Department generally has on file such definitions which are available. If a task to be performed is not subject to one of the classifications of pay set out, the Department will upon being contacted state which neighboring county has such a classification and provide such rate, such rate being deemed to exist by reference in this document. If no neighboring county rate applies to the task, the Department shall undertake a special determination, such special determination being then deemed to have existed under this determination. If a project requires these, or any classification not listed, please contact IDOL at 217-782-1710 for wage rates or clarifications.

LANDSCAPING

Landscaping work falls under the existing classifications for laborer, operating engineer and truck driver. The work performed by landscape plantsman and landscape laborer is covered by the existing classification of laborer. The work performed by landscape operators (regardless of equipment used or its size) is covered by the classifications of operating engineer. The work performed by landscape truck drivers (regardless of size of truck driven) is covered by the classifications of truck driver.

Granular Activated Carbon Replacement
712-W-092

1.0 Scope

The City of Rockford requests bids from qualified vendors to provide all labor, materials, equipment, and supplies necessary for the removal, disposal, and replacement of GAC in two of the five vessels located at Well 35. In addition to the GAC removal/replacement, the two vessels are to be visually inspected to determine the condition of the vessels. The vendor shall also provide additional GAC replacement services at U35 as necessary during the contract period. All work shall be in compliance with all applicable State, Federal and local regulations; including the State of Illinois Department of Public Health, the United States Environmental Protection Agency (USEPA), Resource Conservation and Recovery Act (RCRA), Illinois EPA, applicable Occupational Safety and Health Administration (OSHA) regulations, and Federal and State of Illinois Department of Transportation (IDOT) regulations. Once GAC leaves the City's property it will become the property of the vendor. The contract is effective for one year from date of award and may be extended for three (3) additional one-year terms upon mutual agreement of both parties. If the parties fail to meet mutually agreeable terms by the one-year expiration date the city may re-bid the contract.

Facility U35

Facility U35 contains five (5) Calgon Model 10 adsorption vessels, each vessel containing 20,000 pounds of GAC or a total of 100,000 pounds of GAC. This facility, including the adsorption vessels, is active. See Appendix A – *Reference Drawings*, drawings 801100-E1 and 801100-E2 for site plan and GAC vessel layout details at Facility U35. The GAC contained in the two (2) specified vessels shall be removed from the facility and disposed of by the vendor. The GAC supplier shall clean and inspect the two (2) specified vessels at this facility. Findings of the inspection shall be captured in a report and submitted to the City for review. The vendor shall then replace the GAC in the two vessels with GAC meeting the requirements set forth in this document.

2.0 Definitions

The following regulatory reference definitions applicable to the removal, transportation, and disposal of GAC:

- Resource Conservation and Recovery Act (RCRA)
- Comprehensive Environmental Response, Compensation and Liability Act (CERCLA)
- Department of Transportation (DOT)

Failure to comply with any of these specifications will possibly result in the revocation of the vendor's license, or cancellation of the City's contract.

3.0 General Requirements

3.1 Vendor Qualifications All bidders on this project must be in the business and have been in the business of manufacturing Granular Activated Carbon as specified herein for a period of not less than five (5) years and must be able to supply evidence they have completed GAC removal/replacement services on a least 5 projects similar to this scope of work within the last 10 years. All work to be performed within this contract shall be prevailing wage and benefits.

The successful vendor shall commence the work no later than 15 working days from the date of the notice to proceed.

3.2 The City assumes no responsibility for the condition of existing buildings and structures, nor their continuance in the condition existing at the time of issuance of the contract. No allowance for any change in conditions, which may occur after issuance of the Invitation for Bids, will be made. The City of Rockford reserves the right to reject any or all bids or any part thereof for any reason, to waive any formality, informality or information and errors in the bidding, to accept the bid considered to be in the best interest of the City, or to purchase on the open market if it is considered in the best interest of the City to do so. Failure to submit all requested information may disqualify the bid.

3.3 Contact. Any questions regarding these specifications should be directed to Anne Wilkerson, Financial Analyst at (815) 987-5741 or anne.wilkerson@rockfordil.gov.

3.4 Facility Outages. The adsorption vessels at facility U35 are currently active. The adsorption vessels and/or facility at U35 shall be out of operation for no more than a total of 5 working days. The City shall be given a minimum of 10 working days notice before the proposed shutdown. The shutdown shall not occur without the City's permission. Only one outage at the facility shall be allowed.

3.5 Protection of Persons and Property. The Vendor shall assume and bear all risk of damage to the work, and all risk of any accident, or accidents, from whatsoever cause arising, until the work herein provided for shall be fully completed and accepted by the City.

3.6 Site Security The Vendor shall furnish and erect all temporary fences, sidewalks, barricade covers and other temporary structures necessary for the proper and safe conduct of the work and shall remove all such temporary structures upon

the completion of the work under contract, all without additional compensation therefore. The Vendor shall have a competent superintendent on the site at all times that work is in progress with full authority to act for him. The facility(s) shall be under the control of the Vendor until completion of GAC removal/replacement activities.

3.7 Building Condition During the conduct of the GAC removal/replacement actions, vendor activities shall not threaten, alter, or affect the structural integrity of the buildings and/or tunnels.

Vendors are responsible for completing GAC removal/replacement activities in a manner that will not create substantial damage to structures that could potentially be redeveloped or remodeled. Conditions of the structures, and vendor means and methods of work shall be clarified with the City, or its designee, to clarify if such work would create substantial damage that could negatively impact the value of the structures, or their ability to redeveloped or remodeled.

3.8 Liquidated Damages If the Vendor fails to perform the services according to the specifications outlined in the contract, the Vendor shall pay the City liquidated damages equal to that of the cost to obtain performance of similar services. The City may terminate this contract in whole or part as provided in the default provisions. In that event, the Vendor will be liable for such liquidated damages accruing until such time as the City may reasonably obtain performance of similar services.

3.9 Payment. All work included in these specifications and related necessary tasks to prosecute this work to completion and to the satisfaction of the City of Rockford shall be limited to the total bid price. Vendors must submit dump receipts, manifests, permits, and sampling data (if applicable) for each facility as part of their payment request.

3.9.1 By submitting a bid and all required bid related documentation, the Vendor acknowledges the following:

- The Vendor has read and understood the Project SOW and scheduling requirements stated in this Specification.

- The bid submitted represents a true and fair appraisal to perform comprehensive work in accordance with said Project SOW at U35 located at in, Rockford, Illinois.

4.0 Detailed Specifications

4.1 Bidders. Each bidder shall be qualified, properly licensed, and bonded to operate the business of a GAC supplier in the City of Rockford.

Bidders shall also submit the following:

- List any current litigation pending or prior decisions. Notification of any State or Federal (e.g., EPA, DOT, and OSHA) violations or citations or local citations.

- Proposed waste transportation and disposal facilities/operators.

- A statement by the GAC Vendor in their bid proposal acknowledging that all work shall be performed according to the requirements of this Bid Specification.

The City of Rockford or its designee shall not be held responsible for GAC Vendor oversights or under-estimates, or regulatory violations and imposed restrictions related to the performed work. The City of Rockford reserves the right to accept or reject any and all bids, or portions of any bids relating to this Bid Specification for any and all reasons.

4.2 Utilities The City shall provide water at a maximum flowrate of 100 gallons per minute at a pressure of 60 pounds per square inch for use by the GAC supplier to remove/replace the GAC specified herein. The GAC supplier shall make arrangements for other water sources if required. The City shall also provide an electrical supply of 60Hz/120V. The Vendor shall provide any compressed air, or other utilities required to remove/install the GAC.

4.3 GAC Testing: The vendor shall be responsible for all testing required to remove, transport and dispose of GAC in compliance with these specifications, and all Federal, State, and local regulations.

4.4 Vessel Inspection Report: After removing GAC from the vessels and cleaning the vessels, the vendor shall visually inspect each vessel. The findings of the investigations shall be documented in reports, which shall be submitted to the City for review and approval. The finds for each facility shall be submitted as a separate report. Within each report, the conditions of each of the vessels at the facility shall be clearly segregated. Report shall include text as well as photographs of the vessels combined in a three-ringed binder. Each report will include, at a minimum, the following items:

1) Overall condition of exterior and interior of vessels. Detail should include condition of liners and coatings with photographs and approximate area of

unsatisfactory liner/coating coverage (if deterioration of coatings/liner is observed).

2) Conditions of connecting piping, underdrains, flanges, valves, and connections (carbon hose, backwash, air, utility water, drain/vent, access, etc.) associated with the vessels.

4.5 Removal of Material. The successful bidder shall remove all GAC, rubbish, and waste resulting from the removal work. The bidder shall use an approved disposal site for disposing of all materials. Each bidder shall provide with their bid the location where existing GAC will be disposed of in accordance with all applicable state and federal regulations. Proof of transfer and disposal of these materials will be required by means of manifests, load tickets, and/or bills of lading. The bidder shall leave the premises in such condition that it will not constitute any public nuisance, environmental issues, and/or public health and safety threats.

GAC removal shall be in accordance with OSHA, RECRA, CERCLA, EPA, Federal, State and local requirements. The Vendor must submit all necessary notices for removal, transportation, and disposal as required by the regulating agencies.

4.6 Installation of New GAC at facility U35. New GAC placed into the vessels at facility U35 shall comply with the requirements included in the GAC specification attached as Appendix B– *Granular Activated Carbon Specification*.

4.7 Parking Lots, Basement, and Foundation. Any sidewalk damaged or removed during the work shall be replaced with temporary concrete or bituminous surface at the Vendor's expense, if applicable.

4.8 Fencing. Any fencing damaged or removed during removal/replacement shall be put back in place if not damaged or replaced in kind if damaged.

4.9 Final Grade. Upon completion, disturbed areas must be smoothly graded to match the perimeter if subsurface activities are to occur.

4.10 Basis of Payment. All of the work included in these specifications related to, or necessary to complete this work to the satisfaction of the City of Rockford, shall be paid for at the contract pay item bid price.

GRANULAR ACTIVATED CARBON FILTER MEDIA

PART 1 -- GENERAL

1.1 THE REQUIREMENT

A. The GAC supplier (VENDOR) shall provide granular activated carbon (GAC) filter media for two (2) Calgon Model 10 adsorption vessels located at facility U35 after the vessels have been emptied, cleaned, and inspected. Each vessel shall be filled with 20,000 pounds of GAC in accordance with the Contract Documents. GAC shall be of a type appropriate for the use in pressure vessels processing ground water.

1.2 REFERENCE SPECIFICATIONS, CODES AND STANDARDS

A. Commercial Standards

NSF Standard 61	Drinking Water System Components - Health Effects
AWWA B100	Filtering Material
AWWA B 604	Granular Activated Carbon
ASTM C 128	Standard Test Method for Specific Gravity and Absorption of Fine Aggregate
ASTM D2862	Standard Test Method for Particle Size Distribution of Granular Activated Carbon
ASTM E 11	Wire-Cloth and Sieves for Testing Purposes

1.3 VENDOR SUBMITTALS

A. Furnish submittals including the following:

1. Name and address of GAC Supplier
2. Certification that the GAC samples shipped to the site is virgin carbon and in full compliance with the contract documents.
3. Sieve analysis (test data and plotted data) of media to be used. Indicate effective size and uniformity coefficient of each media. Fine media sizes shall be in millimeters.
4. In-place apparent density of media
5. Description of the detailed procedure proposed for removing existing media, cleaning adsorption vessels, placing the media, supplementing as necessary the installation requirements herein
6. Iodine number
7. Total surface area

8. Bulk density

9. Water Soluble Ash

10. Moisture

11. Abrasion Number

12. Certification that GAC has been leach tested and that the GAC does not leach arsenic or other regulated inorganic compounds into the water being treated.

B. **Samples:** The granular activated carbon samples shall be tested by an approved laboratory to certify compliance with all the requirements. The VENDOR shall cover the cost of this testing and submit certified test results which shall include at a minimum the parameters listed in section 2.2.C of this specification.

C. **Test Data**: Submit certified test results showing gradation and size for each "lot" or partial "lot" of GAC at the time of shipment to the Site.

D. The OWNER may sample 1 quart of each GAC shipment delivered to the Site.

PART 2 -- PRODUCTS

2.1 GENERAL

A. Filter media and filter media testing methods shall conform to the requirements of ANSI/AWWA B100 and AWWA B 604, except as otherwise specified herein.

2.2 GRANULAR ACTIVATED CARBON MEDIA

A. **General:** Granular activated carbon media shall consist of 40,000 pounds of graded material placed within 2 adsorption vessels at facility U35 as specified hereinafter.

B. **Uniformity:** The media furnished for use in the work shall be equal in all respects to the approved samples, and similar samples for test purposes shall be furnished as required during the preparation and placing of the filter materials. All the granular activated carbon shall be manufactured specifically for this project and as a continuous operation to ensure uniformity of physical characteristics. The GAC production process will include screening to eliminate under-and over-sized particles so as to produce a media with the size characteristics required by this specification. The manufacturer will take steps to prevent undue segregation of the granular activated carbon during handling, transport, and storage. The time and date of filling should be provided for all GAC delivered to site. A lot/batch number will be assigned to identify those containers filled from a specific lot/batch production operation. Recognizing that some amount of segregation in the GAC media will occur during handling, storing, and filling of container, extreme care shall be exercised to keep all of the GAC from a single lot/batch together.

C. **Material Quality:** The granular activated carbon shall be virgin and composed of hard durable grains. Average apparent density shall be determined by the procedure set forth in ASTM D2862. The granular activated carbon shall meet the physical properties listed

below and be manufactured from only selected grades of bituminous coal combined with suitable binders, if required, to produce a highly active, durable granular material capable of withstanding the abrasion and dynamics associated with repeated backwashing and transport. Activation shall be carefully controlled to produce a material having a high internal surface area with optimum pore size for effective adsorption of a broad range of high and low molecular weight organic contaminants. The density and particle size shall be designed for packed bed type of adsorption in vessels as described in section 1.1.A above. The material shall have sufficient density to allow backwash agitation and bed expansion, yet settle rapidly for immediate resumption of service.

The granular activated carbon shall conform to the Food Chemical Codex when tested under the conditions of the test outlined in the Food Chemical Codex, Third Edition. The material shall be visually free of foreign materials such as clay, dirt, etc. Lignite, peat, wood, coconut sublignite based carbons will not be accepted.

The material shall have the following physical properties or equivalent to:

Apparent Density (g/cc) (backwashed and drained)	0.46 – 0.58
Total Ash (maximum)	15.0 percent
Water Soluble Ash (maximum)	1.0 percent
Iodine Number (minimum) mg/g	900
Moisture (maximum)	2 percent
Abrasion Number (minimum, Ro-tap Method)	78
Top Sieve	No.8
Bottom Sieve	No.30
Percent remaining on top Sieve (maximum)	15 percent
Percent through Bottom Sieve (maximum)	5 percent
Effective Size (mm)	0.8 to 1.0
Uniformity Coefficient	Less than or equal to 2.1

D. The granular activated carbon shall be free from any significant amounts of iron sulfides, clay, shale, dust or other foreign matter.

E. The GAC will be backwashed, placed in service and a treated water sample taken for total coliform and HPC. For the installation of the GAC to be accepted, the treated water must be free of coliform bacteria and less than 200 colony forming units (cfu) per milliliter for HPC organisms.

F. **Particle Size and Gradation:** Granular activated carbon to be placed in each adsorption vessel shall have a uniformity coefficient and size as specified above. The

particle size shall be determined by screening through standard sieves calibrated in accordance with ASTM D2682. Effective size is defined as the theoretical size of the sieve (in millimeters) that will pass 10 percent of the sample by weight. The uniformity coefficient is defined as the theoretical size of the sieve (in millimeters) that will pass 60 percent of the sample by weight divided by the effective size. No more than 5 percent by weight shall be finer than the lower designated size limit, and not more than 15 percent by weight shall be coarser than the upper designated size limit.

G. **Experience Requirement:** The Supplier must be in the business and have been in the business of manufacturing Granular Activated Carbon as specified herein for a period of not less than five (5) years and supplied GAC for at least 5 projects similar to this scope of work within the last 10 years.

H. **Granular Activated Carbon Suppliers, or Equal:**

1. **Calgon Carbon Corporation**

2. **Norit Americas, Inc.**

3. **Siemens Water Technologies, Corp.**

PART 3 -- EXECUTION

3.1 GENERAL

A. **Placing:** Special care shall be taken in transporting and placing the granular activated carbon to avoid the possibility of contamination with dirt or organic matter. Any granular activated carbon which may have become dirty, either before or after it has been placed in the vessels, shall be either washed or removed and replaced by clean granular activated carbon. Granular activated carbon which has been contaminated by organic matter will be rejected.

B. **Washing and Testing:** After the granular activated carbon has been placed, it shall be washed at a rate that provides 30% bed expansion, with City staff present, by the washing devices connected with the adsorption vessels. The backwash rate shall be slowly increased until the full rate is reached and kept at this rate for a duration of 30 to 60 minutes or as required to remove all fines from the backwash flow.

C. The filters shall be washed and tested one at a time. Water for the initial backwash and testing shall be filtered first.

D. The carbon manufacturer shall provide supervision and equipment to place, remove, and test the GAC.

E. Backwashing shall only begin after the GAC has been installed and has soaked for a minimum of 24 hours.

F. There shall be no significant increase in HPC in treated water after the GAC is installed.

- END OF SECTION -

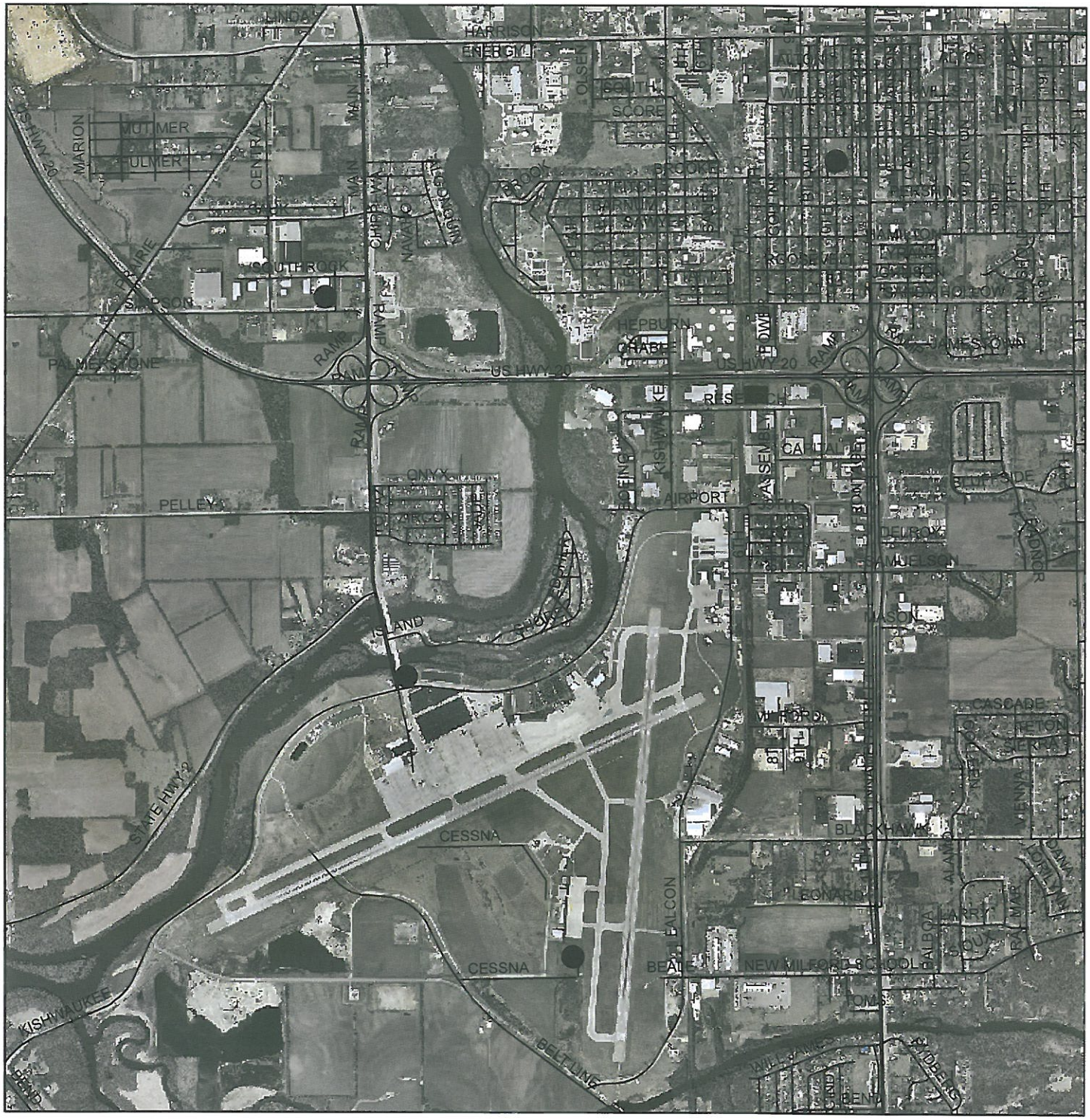

0 0.25 0.5 1 Miles

LEGEND

- Facilities
- Streets

Location Map

City of Rockford, Illinois

MWH

2009

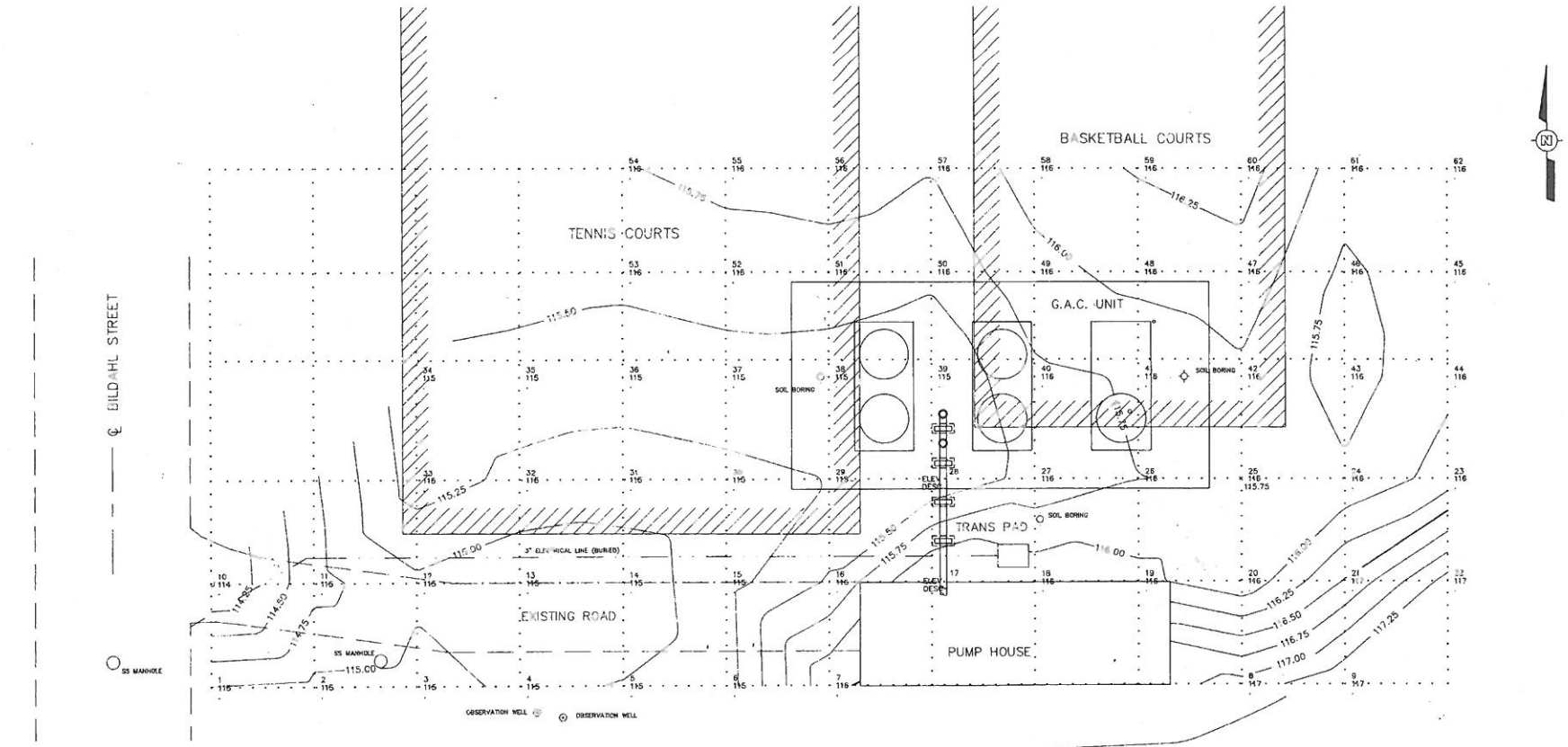

PRELIMINARY DRAWING
NOT CHECKED

SITE PLAN

SCALE
0 10 20 FEET

NO.	DATE	REVISIONS	BY	CHKD	DESIGN ENGR	ENGR	PROJ ENGR	APPR

STARTING DATE 5/20/91 | INITIATOR T. BRINGMAN / CHKD | DRAWN L. JOHNSON / CHKD | PROJECT ENGR J. BRINGMAN

INTERNATIONAL TECHNOLOGY CORPORATION
CHICAGO, ILLINOIS

CONFIDENTIAL PROPERTY OF IT CORPORATION

THIS DRAWING AND ALL INFORMATION THEREON IS CONFIDENTIAL AND MUST NOT BE MADE PUBLIC OR COPIED UNLESS DULY AUTHORIZED, SHALL NOT BE USED EXCEPT FOR THE PURPOSE FOR WHICH IT WAS SUPPLIED, AND IS SUBJECT TO RETURN ON DEMAND. ALL RIGHTS OF INVENTION OR DESIGN ARE RESERVED.

UNIT WELL NO. 35
SITE PLAN

GRANULAR ACTIVATED CARBON TREATMENT FACILITY
ROCKFORD, ILLINOIS

AREA	JOB NO.	DRAWING NO.	REV
	801100	801100--E1	

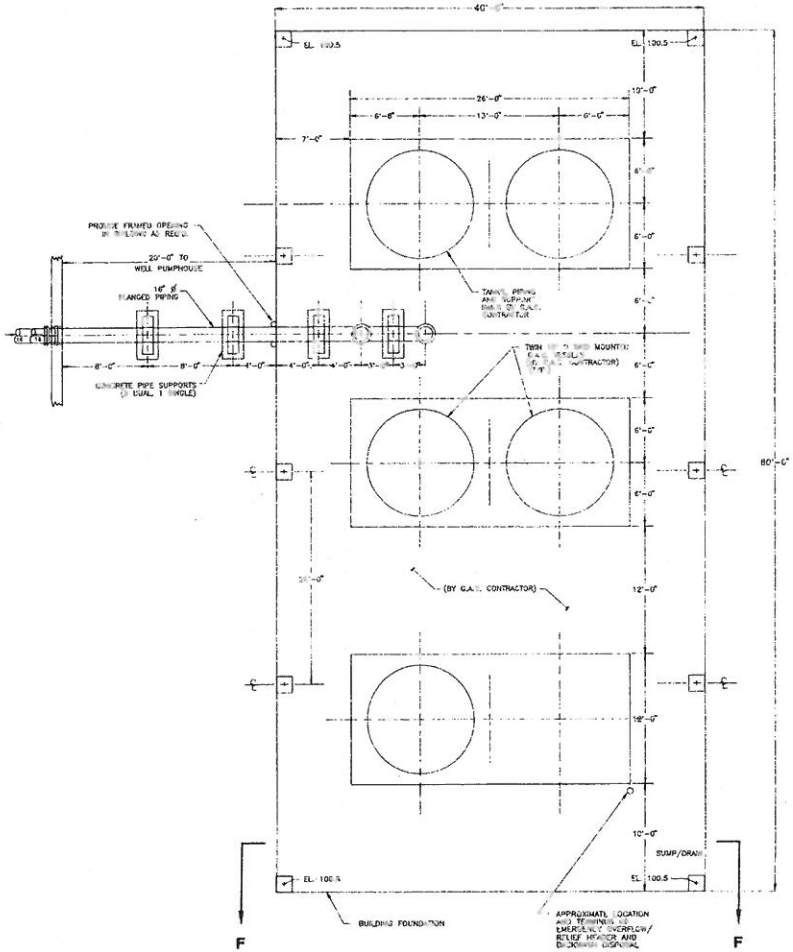

TREATMENT AREA

3/16" = 1'-0"

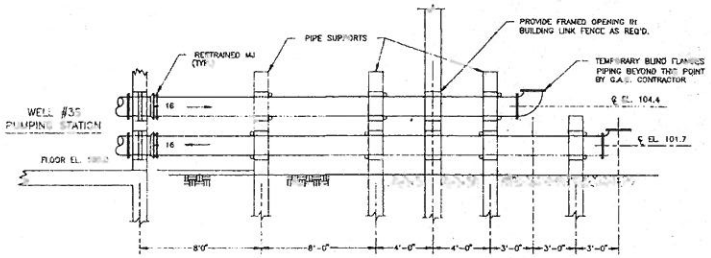

PIPING W/SUPPORTS TO G.A.C.

1/4" = 1'-0"

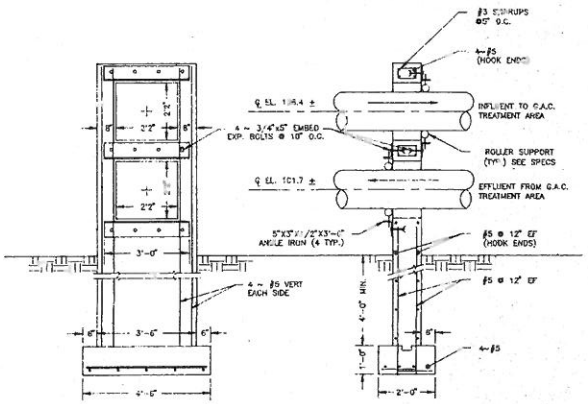

CONCRETE PIPE SUPPORT DETAILS

1/2" = 1'-0"

PRELIMINARY DRAWING NOT CHECKED

NO.	DATE	REVISIONS	BY	CHKD	DESIGN ENGR	ENGR.	PROJ ENGR	APPR

STARTING DATE 8/22/91 | INITIATOR | DRAWN | CHKD | PROJECT ENGR

INTERNATIONAL TECHNOLOGY CORPORATION
CHICAGO, ILLINOIS

CONFIDENTIAL. PROPERTY OF IT CORPORATION

THIS DRAWING AND ALL INFORMATION THEREON IS CONFIDENTIAL AND MUST NOT BE MADE PUBLIC OR COPIED UNLESS DULY AUTHORIZED. SHALL NOT BE USED EXCEPT FOR THE PURPOSE FOR WHICH IT WAS SUPPLIED, AND IS SUBJECT TO RETURN ON DEMAND. ALL RIGHTS OF INVENTION OR DESIGN ARE RESERVED.

TREATMENT AREA AND PIPING DETAILS
UNIT WELL NO. 35

GRANULAR ACTIVATED CARBON TREATMENT FACILITY
ROCKFORD, ILLINOIS

AREA	JOB NO.	DRAWING NO.	REV
	801100	801100-E2	

Bid Form
Granular Activated Carbon Replacement
712-W-092

We bid as follows:

	Quantity	Unit Price	Total Price
Facility U35 Vessel GAC Removal	2	$ _____	$ _____

_____
Person, Firm or Corporation

_____
Authorized Signature and Title