CITY OF ROCKFORD
WELLNESS CENTER

Larson & Darby Group
architects engineers interiors
4949 Harrison Avenue, Suite 100
Rockford, Illinois 61108

ISSUED FOR: BID

JUNE 30, 2014

SHEET INDEX

ABBREVIATIONS

ALUM.	ALUMINUM
ACOUST.	ACOUSTICAL
CLG.	CEILING
CONT.	CONTINUOUS
BTM.	BOTTOM
DTL.	DETAIL
DWG.	DRAWING
EA.	EACH
F.B.O.	FURNISHED BY OWNER
GALV.	GALVANIZED
HDWR.	HARDWARE
HR.	HOUR
INSUL.	INSULATION
MATL.	MATERIAL
MTL.	METAL
N.I.C.	NOT IN CONTRACT
O.C.	ON CENTER
OPNG.	OPENING
RTG.	RATING
SPEC.	SPECIFICATION
STD.	STANDARD
STL.	STEEL
U.N.O.	UNLESS NOTED OTHERWISE
W/	WITH

MATERIALS

- CMU
- CONCRETE
- EARTH
- GRAVEL (GRANULAR FILL)
- STEEL
- WOOD BLOCKING (LUMBER)
- FINISHED WOOD TRIM
- PLYWOOD
- GYP. WALLBOARD
- BATT INSULATION
- RIGID INSULATION

NO.	DESCRIPTION
	ARCHITECTURAL
CS	COVER SHEET
A1.1	FIRST FLOOR PLAN
A2.1	ENLARGED PLANS / INTERIOR ELEVATIONS
	PLUMBING
P0.1	LOWER LEVEL PLUMBING PLAN
P0.3	PLUMBING SPECS
P1.1	FIRST FLOOR PLUMBING PLAN
	HVAC
M1.1	HVAC FIRST FLOOR PLAN
M2.0	SCHEDULES
M3.0	SYMBOLS AND NOTES
M4.0	DETAILS
M5.0	SPECIFICATIONS
	ELECTRICAL
E1.1	LIGHTING FIRST FLOOR PLAN
E2.1	POWER FIRST FLOOR PLAN
E3.1	FIRE ALARM FIRST FLOOR PLAN
E4.0	NOTES
E4.1	SYMBOLS
E5.0	SPECIFICATIONS

GENERAL NOTES

COMPLIANCE STATEMENT –
I HAVE PREPARED, OR CAUSED TO BE PREPARED UNDER MY DIRECT SUPERVISION, THE ATTACHED PLANS AND SPECIFICATIONS AND STATE THAT, TO THE BEST OF MY KNOWLEDGE AND BELIEF AND TO THE EXTENT OF MY CONTRACTUAL OBLIGATION, THEY ARE IN COMPLIANCE WITH THE ENVIRONMENTAL BARRIERS ACT [410 ILCS 25] AND THE ILLINOIS ACCESSIBILITY CODE, (71 IL. ADM. CODE 400). ADA HAS NEITHER A SUBMITTAL REVIEW, NOR AN INSPECTION PROCESS TO INTERPRET DISABILITY LAWS. AS PART OF THE CIVIL RIGHTS ACT AND NOT A CODE, ADA COMPLIANCE CAN NOT BE CERTIFIED TO. TO THE BEST OF MY ABILITY AND KNOWLEDGE, I HAVE INTERPRETED AND ATTEMPTED TO COMPLY WITH ALL ADA STANDARDS, 42 U.S.C. SECTION 12101 ET SEQ. THIS IS PERCEIVED COMPLIANCE, NOT CERTIFICATION.

CODE SUMMARY

Building Code: 2009 International Building Code (IBC) (with Rockford amendments)

Other Codes: 2009 International Mechanical, Electrical, & Fire Codes (with Rockford amendments)
1998 Illinois Plumbing Code
2012 International Energy Conservation Code

Accessibility Code: 1997 Illinois Accessibility Code (IAC)

Type of Project: Renovation of an existing space

Use & Occupancy Class: A-3 (Assembly)

Type of Construction: IIB (noncombustible)

Fire Suppression: Facility to be fully sprinklered

Allowable Height: 35' Max. (Rockford Zoning)
2-story at 55' (IBC - Table 503)

Actual Height: 28' (at high point)

Allowable Area: 9,500 s.f. (Table 503)
4,229 s.f. (Frontage increase - 506.2)
28,500 s.f. (Sprinkler increase - 506.3)
42,229 s.f. Total Allowable per floor

Actual Area: Existing to remain unchanged

Exit Access Travel Distance (1004.2.4)
with Sprinkler System: 250'

Fire-resistance Rating Requirements: (Table 601)
Structural Frame: 0 hr.
Bearing Walls - Exterior: 0 hr.
Bearing Walls - Interior: 0 hr.
Non-bearing Walls & Partitions - Exterior: 0 hr.
Non-bearing Walls & Partitions - Interior: 0 hr.
Floor Construction - Beams & Joists: 0 hr.
Roof Construction - Beams & Joists: 0 hr.

Exterior Wall Ratings base on Separation Distance (Table 602)
≥10' <30', IIB, Group A-3: 0 hr.

Corridor Fire-resistance Ratings (1004.3.2.1)
with Sprinkler System: 0 hr.

Design Occupant Load:

	by Table 1003.2.2.2	Actual
Social Hall:	277	200
(3)Meeting Rooms:	68 x 3 = 204	40 x 3 = 120
Office Areas:	6	2
Kitchen:	4	4
Storage & Mechanical:	10	1

SITE LOCATION MAP

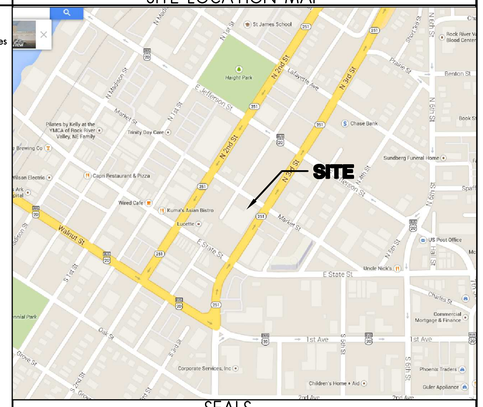

SEALS

Larson & Darby Group Design Firm Registration Number: 184-000280

Larson & Darby Group
Architects Engineers Planners
Rockford Office - 4949 Harrison Ave., Suite 100, P.O.Box 5207 Rockford, IL 61125 Tel (815) 484-0739 Fax (815) 229-9867

CITY OF ROCKFORD
120 N 3RD STREET
ROCKFORD, ILLINOIS

COPYRIGHT 2014
All drawn and written information appearing herein shall not be duplicated, disclosed, or otherwise used without the written consent of Larson & Darby Group

ISSUED FOR:	DATE
ISSUED FOR BID	6/30/14

DRAWN	APPROVED
-	-

DATE:	03-28-2014
PROJECT NUMBER	24043
SHEET NUMBER	CS

P:\24043 City of Rockford Wellness Center Study and CDs\Dwg\Arch\24043CS1.dwg 6/30/2014 10:15:57
AM

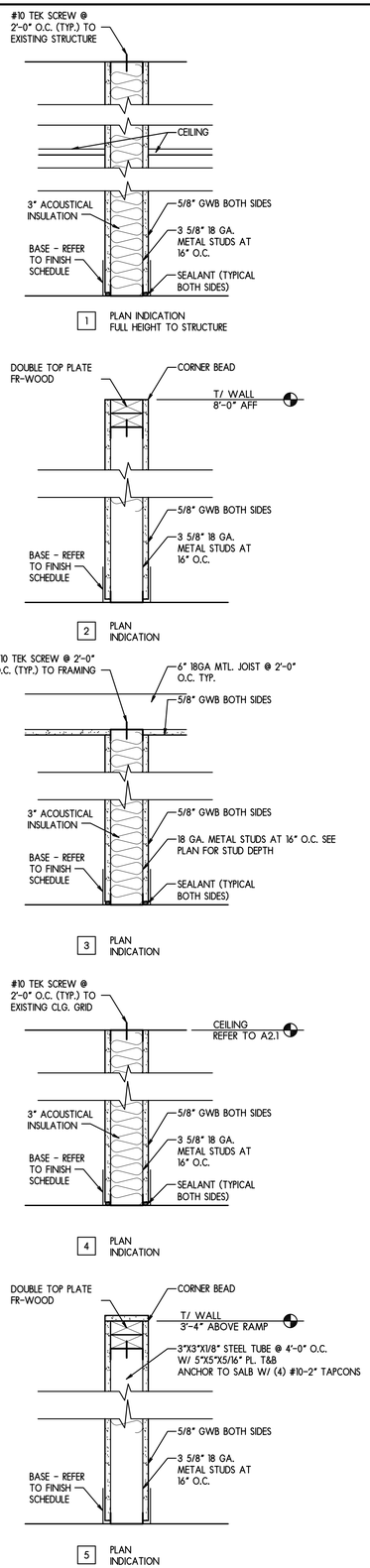

WALL TYPES

SCALE: N.T.S.

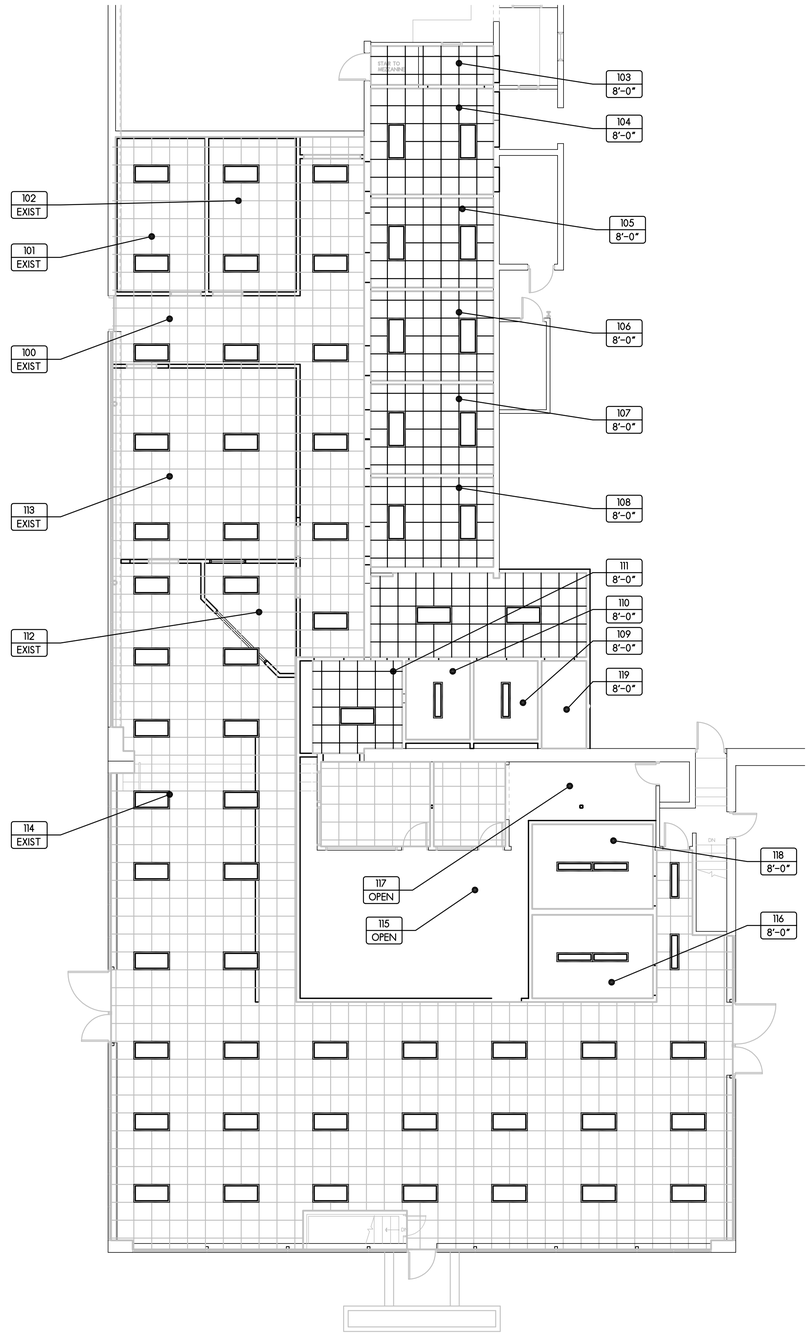

1 REFLECTED CEILING PLAN

SCALE: 1/8" = 1'-0"

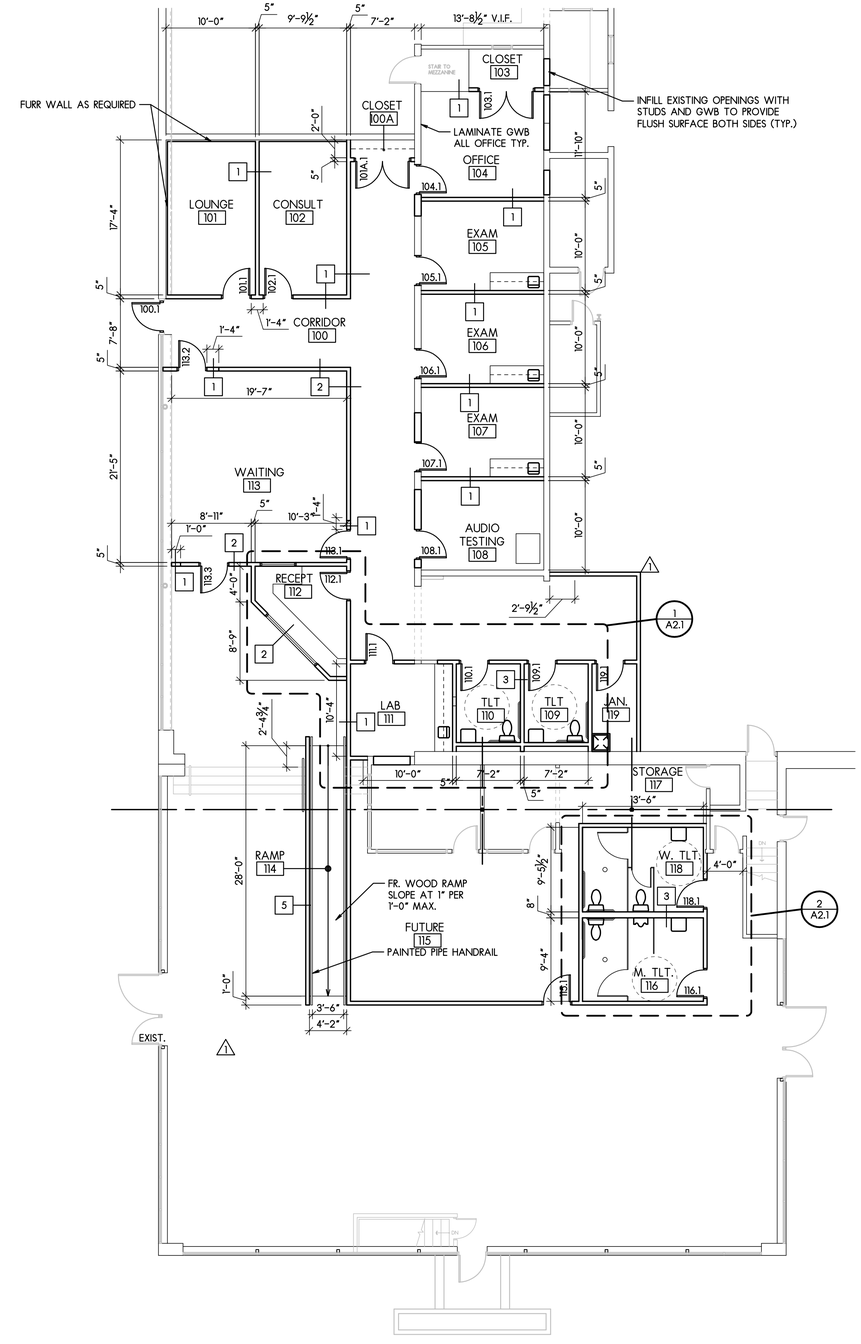

2 DIMENSION PLAN

SCALE: 1/8" = 1'-0"

GENERAL NOTES

1. PLANS SHOW THE FINAL STATE OF CONSTRUCTION AT COMPETITION. SOME WORK MAY HAVE BEEN COMPLETED UNDER PREVIOUS CONTRACTS, A SITE VISIT IS REQUIRED PRIOR TO SUBMITTING A BID.
2. BY SUBMITTING A BID ALL CONTRACTORS ACKNOWLEDGE THEY HAVE VISITED THE SITE AND TAKEN INVENTORY OF THE WORK IN PLACE AND MATERIALS ON SITE OR AVAILABLE FROM PRIOR WORK.
3. ALL COSTS TO REWORK OR ADAPT EXISTING CONSTRUCTION SHALL BE INCLUDED IN THE BID.

FIRST FLOOR PLAN

SCALE: 1/8" = 1'-0"

North

Larson & Darby Group
Architects Engineers Planners
Rockford Office - 4949 Harrison Ave., Suite 100, P.O.Box 5207 Rockford, IL 61125 Tel (815) 484-0799 Fax (815) 229-9867

CITY OF ROCKFORD
120 N 3RD STREET
ROCKFORD, ILLINOIS

COPYRIGHT 2014
All drawn and written information appearing herein shall not be duplicated, disclosed, or otherwise used without the written consent of Larson & Darby Group

ISSUED FOR:	DATE
ISSUED FOR BID	6/30/14

DRAWN	APPROVED
-	-

DATE: 03-28-2014
PROJECT NUMBER 24043
SHEET NUMBER A1.1

P:\24043 City of Rockford Wellness Center Study and CDs\Dwg\Arch\24043A11.dwg 6/30/2014 10:23:21 AM

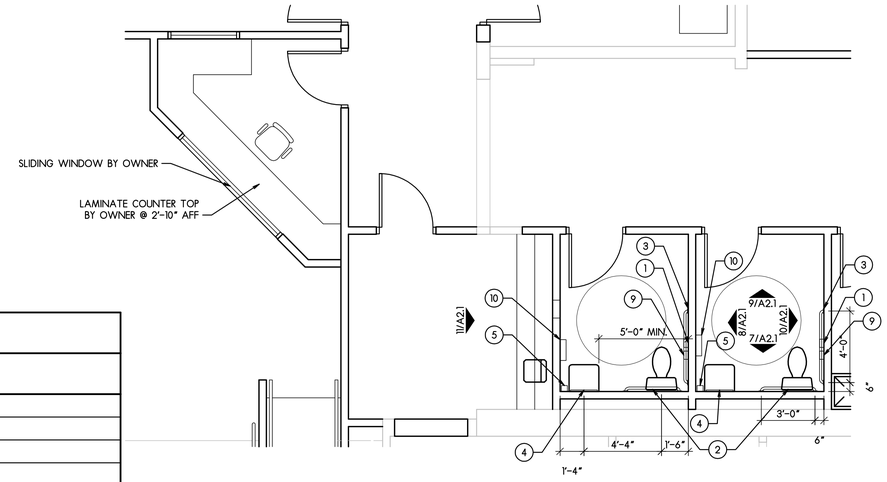

1 ENLARGED RESTROOM PLAN
SCALE: 1/4" = 1'-0"

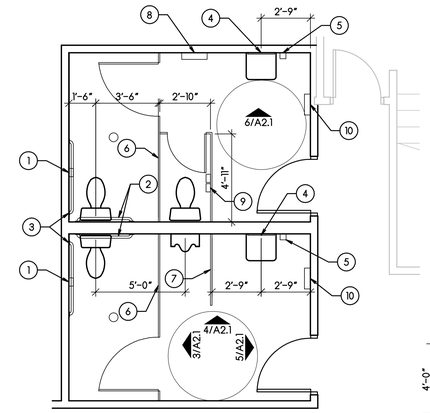

2 ENLARGED RESTROOM PLAN
SCALE: 1/4" = 1'-0"

NOTE: MODEL NUMBERS ARE BASED ON "BRADLEY" (U.N.O.)

TOILET ACCESSORY SCHEDULE

TYPE	DESCRIPTION
1	SINGLE ROLL TOILET PAPER HOLDER (MODEL 508)
2	36" GRAB BAR (MODEL 812)
3	48" GRAB BAR (MODEL 812)
4	CHANNEL FRAME MIRROR (MODEL 781)
5	SURFACE MOUNTED SOAP DISPENCER (MODEL 6501)
6	TOILET PARTITIONS - ACCURATE FLOOR MTD. OVERHEAD BRACED, SOLID PLASTIC #9200 GREY
7	URINAL SCREEN (18" X 42") - ACCURATE SOLID PLASTIC #9200 GREY
8	VENDING MACHINE (MODEL 4018-10)
9	SANITARY NAPKIN DISPOSAL (MODEL4781)
10	TOWEL DISP./WASTE RECEPT. (MODEL 229-10)

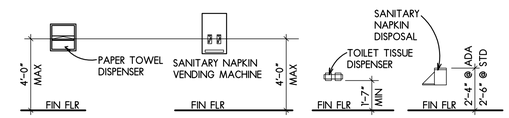

TOILET ACCESSORY MOUNTING HEIGHTS
SCALE: 1/4" = 1'-0"

NOTES:
1. TOILET ACCESSORIES SHALL BE LOCATED SO THAT THE OPERATIVE PORTION (PUSH KNOB, TOWEL SLOT, ETC) SHALL BE MAXIMUM 4'-0" FROM THE FINISHED FLOOR FOR FRONT APPROACH AND 4'-6" FROM THE FINISHED FLOOR FOR SIDE APPROACH UNLESS NOTED OTHERWISE.
2. ACCESSORIES SHOWN ABOVE ARE FOR ILLUSTRATION ONLY. SEE SPECIFICATIONS FOR ACTUAL MODEL NUMBERS.

MATERIAL LEGEND

TAG	SPECIFICATION
AC1	MATCH EXISTING
P	PAINT - SELECTED BY OWNER
RB	RUBBER BASE - SELECTED BY OWNER
VT	VINYL TILE - SELECTED BY OWNER

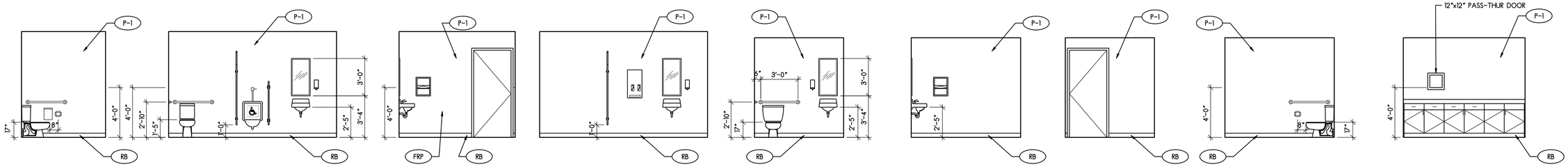

3 ELEVATION SCALE: 1/4" = 1'-0"
4 ELEVATION SCALE: 1/4" = 1'-0"
5 ELEVATION SCALE: 1/4" = 1'-0"
6 ELEVATION SCALE: 1/4" = 1'-0"
7 ELEVATION SCALE: 1/4" = 1'-0"
8 ELEVATION SCALE: 1/4" = 1'-0"
9 ELEVATION SCALE: 1/4" = 1'-0"
10 ELEVATION SCALE: 1/4" = 1'-0"
11 ELEVATION SCALE: 1/4" = 1'-0"

DOOR OPENING SCHEDULE

DOOR				FRAME			HARDWARE	
OPNG NO	TYPE	MATL	PR SIZE	TYPE	MATL	FIRE RTG	HARDWARE GROUP	REFERENCE NOTES
100.1	EXIST.	EXIST.	-- EXIST.	EXIST.	EXIST.	---	2	EXISTING TO REMAIN. NEW HRDWR.
101A.1	F	WD	1 6'-0"x7'-0"x1¾"	1	HM	---	5	PROVIDE SURFACE FLUSH BOLTS AT INACTIVE LEAF
101.1	F	WD	-- 3'-0"x7'-0"x1¾"	1	HM	---	4	-
102.1	F	WD	-- 3'-0"x7'-0"x1¾"	1	HM	---	4	-
103.1	F	WD	1 6'-0"x7'-0"x1¾"	1	HM	---	5	PROVIDE SURFACE FLUSH BOLTS AT INACTIVE LEAF
104.1	F	WD	-- 3'-0"x7'-0"x1¾"	1	HM	---	4	-
105.1	F	WD	-- 3'-0"x7'-0"x1¾"	1	HM	---	4	-
106.1	F	WD	-- 3'-0"x7'-0"x1¾"	1	HM	---	4	-
107.1	F	WD	-- 3'-0"x7'-0"x1¾"	1	HM	---	4	-
108.1	F	WD	-- 3'-0"x7'-0"x1¾"	1	HM	---	4	-
109.1	F	WD	-- 3'-0"x7'-0"x1¾"	1	HM	---	3	-
110.1	F	WD	-- 3'-0"x7'-0"x1¾"	1	HM	---	3	-
111.1	F	WD	-- 3'-0"x7'-0"x1¾"	1	HM	---	4	-
112.1	F	WD	-- 3'-0"x7'-0"x1¾"	1	HM	---	4	-
113.1	F	WD	-- 3'-0"x7'-0"x1¾"	1	HM	---	4	-
113.2	F	WD	-- 3'-0"x7'-0"x1¾"	1	HM	---	4	-
113.3	F	WD	-- 3'-0"x7'-0"x1¾"	1	HM	---	6	-
116.1	F	WD	-- 3'-0"x7'-0"x1¾"	1	HM	---	7	-
118.1	F	WD	-- 3'-0"x7'-0"x1¾"	1	HM	---	7	-
119.1	F	HM	-- 3'-0"x7'-0"x1¾"	1	HM	---	5	-
EXIST.	EXIST.	EXIST.	-- EXIST.	EXIST.	EXIST.	---	1	EXISTING TO REMAIN. NEW HRDWR.

HARDWARE GROUPS

SET 1:
- - HINGE - EXISTING TO REMAIN
1 PULL & PANIC BAR - VON DUPRIN 55 RIM
1 CYLINDER AS REQUIRED
1 INTERCHANGABLE CORE
- CLOSER - EXISTING TO REMAIN
- SILENCERS - EXISTING TO REMAIN
- THRESHOLD - EXISTING TO REMAIN

SET 2:
- - HINGE - EXISTING TO REMAIN
1 EXIT LOCKSET- 11G13LP, US26D SARGENT
1 PULL PLATE - DETEX 03PP
1 CYLINDER AS REQUIRED
1 DETEX - INTERCHANGABLE CORE IC7R
1 DETEX ALARM - ECL-230D
- CLOSER - EXISTING TO REMAIN
- SILENCERS - EXISTING TO REMAIN
- THRESHOLD - EXISTING TO REMAIN

SET 3:
3 HINGE TA2714 NRP 4 1/2"x4 1/2" MCKINNEY
1 PRIVACY LOCKSET- 11U65LP, US26D SARGENT
1 CYLINDER LOCK - 7 PIN
1 CLOSER - CPS8501, 689 NORTON
3 SILENCERS - 608 ROCKWOOD
1 WALLSTOP - 400, 626 ROCKWOOD

SET 4:
3 HINGE TA2714 NRP 4 1/2"x4 1/2" MCKINNEY
1 OFFICE LOCKSET- 11G05LP, US26D SARGENT
1 CLOSER - CPS8501, 689 NORTON
1 INTERCHANGABLE CORE
3 SILENCERS - 608 ROCKWOOD
1 WALLSTOP - 400, 626 ROCKWOOD

SET 5:
3 HINGE TA2714 NRP 4 1/2"x4 1/2" MCKINNEY (PER LEAF)
1 STOREROOM LOCKSET- 11G04LP, US26D SARGENT
1 SURFACE MOUNTED FLUSH BOLTS T&B (INACTIVE LEAF)
1 CYLINDER LOCK - 7 PIN
1 INTERCHANGABLE CORE
3 SILENCERS - 608 ROCKWOOD
1 WALLSTOP - 400, 626 ROCKWOOD

SET 6:
3 HINGE TA2714 NRP 4 1/2"x4 1/2" MCKINNEY
1 DETEX ALARM - ECL-230D
1 CYLINDER AS REQUIRED
1 DETEX - INTERCHANGABLE CORE IC7R
1 CLOSER - CPS8501, 689 NORTON
3 SILENCERS - 608 ROCKWOOD

SET 7:
3 HINGE TA2714 NRP 4 1/2"x4 1/2" MCKINNEY
1 PUSH/PULL SET
1 CLOSER - CPS8501, 689 NORTON
1 CYLINDER LOCK - 7 PIN
1 INTERCHANGABLE CORE
3 SILENCERS - 608 ROCKWOOD
1 WALLSTOP - 400, 626 ROCKWOOD

F
DOOR TYPES
SCALE: 1/4" = 1'-0"

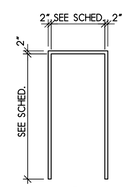

1
FRAME TYPES
SCALE: 1/4" = 1'-0"

ROOM FINISH SCHEDULE

ROOM		FLOOR				WALL FINISH				CEILINGS			
NO.	NAME	MATL	BASE	CHAIRRAIL	WAINSCOT	N	S	E	W	MATL	FIN	HT	NOTES
100	CORRIDOR	VT	RB	-	-	P	P	P	P	AC1	-	ETR	-
100A	CLOSET	VT	RB	-	-	P	P	P	P	AC1	-	ETR	-
101	LOUNGE	VT	RB	-	-	P	P	P	P	AC1	-	ETR	-
102	CONSULT	VT	RB	-	-	P	P	P	P	AC1	-	ETR	-
103	CLOSET	VT	RB	-	-	P	P	P	P	AC1	-	8'-0"	-
104	OFFICE	VT	RB	-	-	P	P	P	P	AC1	-	8'-0"	-
105	OFFICE	VT	RB	-	-	P	P	P	P	AC1	-	8'-0"	-
106	OFFICE	VT	RB	-	-	P	P	P	P	AC1	-	8'-0"	-
107	OFFICE	VT	RB	-	-	P	P	P	P	AC1	-	8'-0"	-
108	AUDIO TESTING	VT	RB	-	-	P	P	P	P	AC1	-	8'-0"	-
109	LAB	VT	RB	-	-	P	P	P	P	AC1	-	8'-0"	-
110	TOILET ROOM	VT	RB	-	-	P	P	P	P	AC1	P	8'-0"	-
111	TOILET ROOM	VT	RB	-	-	P	P	P	P	AC1	P	8'-0"	-
112	RECEPTION	VT	RB	-	-	P	P	P	P	AC1	-	ETR	-
113	WAITING	VT	RB	-	-	P	P	P	P	AC1	-	ETR	-
1114	RAMP	VT	RB	-	-	P	P	P	P	AC1	-	ETR	-
115	FUTURE	VT	RB	-	-	P	P	P	P	OPEN	-	ETR	-
116	TOILET ROOM	VT	RB	-	-	P	P	P	P	GWB	P	8'-0"	-
117	STORAGE	CONC.	RB	-	-	P	P	P	P	OPEN	-	ETR	-
118	TOILET ROOM	VT	RB	-	-	P	P	P	P	GWB	P	8'-0"	-
119	JANITOR	CONC.	RB	-	-	P	P	P	P	GWB	P	8'-0"	-

GENERAL NOTES:

1. DO NOT SCALE DRAWINGS. WRITTEN DIMENSIONS TAKE PRECEDENT. NOTIFY ARCHITECT OF ANY CONFLICTS.
2. PROVIDE SOLID FR BLOCKING IN WALLS WHERE REQUIRED FOR MOUNTING, COORDINATE WITH TENANT

ENLARGED PLANS / INTERIOR ELEV./ LEGENDS & SCHEDULES

SCALE: AS NOTED

Larson & Darby Group
Architects Engineers Planners
Rockford Office - 4949 Harrison Ave., Suite 100, P.O.Box 5207 Rockford, IL 61125 Tel (815) 484-0799 Fax (815) 229-9867

CITY OF ROCKFORD
120 N 3RD STREET
ROCKFORD, ILLINOIS

COPYRIGHT 2014
All drawn and written information appearing herein shall not be duplicated, disclosed, or otherwise used without the written consent of Larson & Darby Group

ISSUED FOR: DATE
ISSUED FOR BID 6/30/14

DRAWN APPROVED

DATE: 03-28-2014
PROJECT NUMBER 24043
SHEET NUMBER A2.1

P:\24043 City of Rockford Wellness Center Study and CDs\Dwg\Arch\24043A21.dwg 6/30/2014 10:16:04 AM

GAS FIRED WATER HEATER (GWH) SCHEDULE

EQUIP. TAG	MANUFACTURER	MODEL	BTUH INPUT	RECOVERY CAPACITY	FLUE DIAMETER	VOLTAGE REQUIREMENTS
GWH-1	A.O. SMITH OR EQUAL	XVR-30 SERIES 300 / 301	36,000	36 GPH @ 90°ΔT	3 INCH	---

NOTES:
1. ALL CAPACITIES LISTED ARE MINIMUM REQUIREMENTS.
2. CONNECT FLUTE INTO EXISTING CHIMNEY.

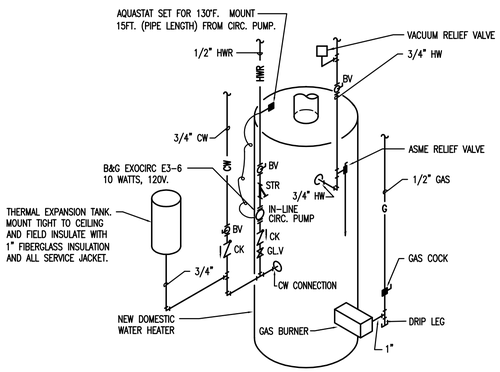

DOMESTIC HOT WATER HEATER PIPING DIAGRAM
NO SCALE

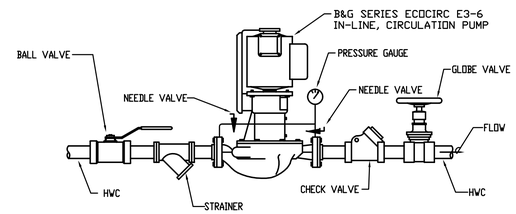

NOTE: ALL VALVES AND STRAINERS SHALL BE EQUAL TO LINE SIZES AS SHOWN ON PLANS. PUMP CONNECTIONS MAY DEVIATE FROM LINE SIZE.

DOMESTIC HOT WATER CIRCULATING PUMP DETAIL
NO SCALE

ABBREVIATIONS AND SYMBOLS

CW	COLD WATER
HW	HOT WATER
HWR	HOT WATER RE-CIRCULATION
SA	SANITARY PIPING
V	VENT
VTR	VENT THROUGH ROOF
GWH	HOT WATER HEATER
VTR	CIRCULATING PUMP
FFA	FROM FLOOR ABOVE
TFA	TO FLOOR ABOVE
TFB	TO FLOOR BELOW
TFB	FROM FLOOR BELOW

KEYED NOTES

1. CONTRACTOR TO REMOVE EXISTING BFP AND FURNISH AND INSTALL NEW 2" BFP PER CITY OF ROCKFORD REQUIREMENTS.
2. TIE INTO EXISTING NATURAL GAS AND RUN NEW 1/2" LINE TO GWH.
3. CONTRACTOR TO COORDINATE WITH CITY OF ROCKFORD WATER DEPARTMENT FOR NEW 2" WATER METER AND NEW 4" WATER SERVICE.
4. COORDINATE WITH CITY OF ROCKFORD WATER DEPARTMENT. CITY OF ROCKFORD TO PROVIDE NEW 4" WATER SERVICE UP TO CUTOFF BOX. CONTRACTOR TO BRING SERVICE INTO BUILDING. SERVICE TO BE 4" INTO BUILDING. PROVIDE 4 X 2 REDUCER AND EXTEND 2" TO WATER METER AND BFP.
5. CONNECT EXISTING CW TO TOILET ROOMS TO NEW CW LINE.

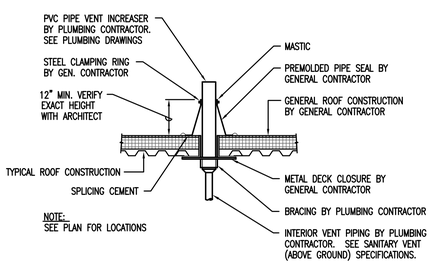

PLUMBING VENT THROUGH ROOF (VTR) DETAIL
NO SCALE

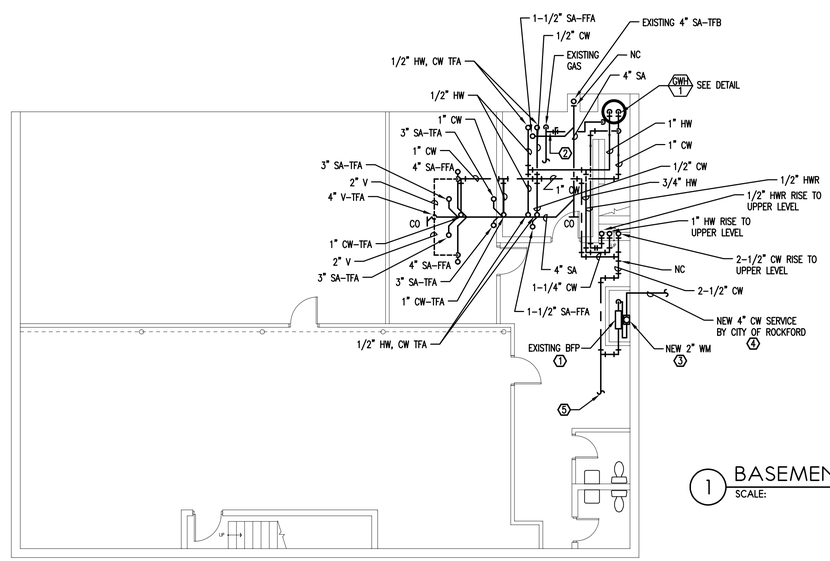

1 BASEMENT PLAN - PLUMBING
SCALE: 1/8" = 1'-0"

North

OAS, LLC
O'HIGGINS AND ARNOLD SUSTAINABILITY, LLC
769 HEARTLAND DR., UNIT A SUGAR GROVE, ILLINOIS 60554

Larson & Darby Group
Architects Engineers Planners
Rockford Office - 4949 Harrison Ave., Suite 100, P.O.Box 5207 Rockford, IL 61125 Tel (815) 484-0799 Fax (815) 229-9657

CITY OF ROCKFORD
120 N 3RD STREET
ROCKFORD, ILLINOIS

COPYRIGHT 2014
All drawn and written information appearing herein shall not be duplicated, disclosed, or otherwise used without the written consent of Larson & Darby Group

ISSUED FOR: DATE
ISSUED FOR CONSTRUCTION 06-20-14

DRAWN CRF
APPROVED KBO

DATE: 06-26-2014
PROJECT NUMBER 24043
SHEET NUMBER P0.1

PLOTTED BY: RUBEN DELAFUENTE DATE PLOTTED: 6/20/2014 11:13 AM FILE PATH AND NAME: P:\037-A-- Rockford Wellness Center Plumbing Design\P\037a1-P01

SPECIFICATIONS - PLUMBING

I. SCOPE

THE WORK COVERED BY THIS SPECIFICATION INCLUDES THE COMPLETE PLUMBING SYSTEM.

THE WORK TO BE PERFORMED UNDER THE PLUMBING SPECIFICATIONS AND DRAWINGS CONSISTS OF FURNISHING ALL LABOR AND MATERIAL FOR THE COMPLETE INSTALLATION OF THESE SYSTEMS, INCLUDING, BUT NOT LIMITED TO, THE FOLLOWING:

A. UNDERGROUND AND ABOVE GROUND PIPING, FIXTURES, VALVES ETC.
B. HOT WATER HEATERS, ETC.
C. PLUMBING SPECIALTIES
D. PLUMBING EQUIPMENT

II. GENERAL

THIS SPECIFICATION IS INCLUSIVE FOR EACH ITEM REQUIRING ALL LABOR, MATERIAL AND EQUIPMENT NECESSARY TO PROPERLY INSTALL, ALTER, ADJUST AND PUT IN OPERATION, THE COMPLETE PLUMBING AND FIRE PROTECTION SYSTEM.

THE CONTRACTOR IS RESPONSIBLE FOR THE PROPER LAYOUT AND CONSTRUCTION OF THE WORK INCLUDED IN THIS CONTRACT.

THE DRAWINGS AND SPECIFICATIONS SHALL BE UNDERSTOOD TO COVER, ACCORDING TO THEIR INTENT AND MEANING, COMPLETE SYSTEMS AS DESCRIBED HEREIN.

MINOR ITEMS, ACCESSORIES AND DEVICES REASONABLY INFERABLE AS NECESSARY FOR THE COMPLETE AND PROPER OPERATION OF ANY SYSTEM SHALL BE PROVIDED BY THE CONTRACTOR FOR SUCH SYSTEM(S) WHETHER THEY ARE SPECIFICALLY CALLED FOR BY THE DRAWINGS AND/OR SPECIFICATIONS OR NOT.

DRAWINGS ARE GENERALLY DIAGRAMMATIC. ROUTING OF PIPING ARE SHOWN, BUT DO NOT INTEND TO SHOW EVERY RISE, DROP, OFFSET, FITTING, NOR EVERY STRUCTURAL ELEMENT THAT MAY BE ENCOUNTERED DURING THE INSTALLATION OF THIS WORK. CONTRACTOR SHALL MAKE ANY REQUIRED CHANGES FROM THE GENERAL ROUTING SHOWN ON THESE DRAWINGS, SUCH AS OFFSETS, BENDS OR CHANGES IN ELEVATION DUE TO COORDINATION WITH THE WORK OF OTHER TRADES AND BUILDING CONSTRUCTION. ALL CHANGES SHALL BE MADE WITHOUT ADDITIONAL COST TO THE OWNER OR DELAY IN COMPLETION DATE OF THE PROJECT.

IT IS INTENDED THAT EQUIPMENT SHALL BE LOCATED SYMMETRICALLY WITH THE ARCHITECTURAL ELEMENTS OF THE BUILDING, NOTWITHSTANDING THE FACT THAT LOCATIONS INDICATED BY THESE DRAWINGS MAY BE DISTORTED FOR CLEARNESS OF PRESENTATION.

CONTRACTOR SHALL BE RESPONSIBLE AND PAY FOR ALL CORING, CUTTING, PATCHING, REPAIRING AND REFINISHING OF BUILDING CONSTRUCTION REQUIRED TO ACCOMMODATE THE INSTALLATION OF THEIR WORK. ALL PATCHING, REPAIRING AND REFINISHING WORK SHALL BE PERFORMED BY THOSE REGULARLY INVOLVED IN THAT TRADE AND SHALL MATCH THE NEW CONSTRUCTION AS CLOSELY AS POSSIBLE. CARE SHALL BE TAKEN SO AS NOT TO DAMAGE ANY EXISTING BUILDING CONSTRUCTION OR ITEMS THAT ARE TO REMAIN. ANY EXISTING FINISHES THAT ARE DAMAGED DURING THE INSTALLATION OF NEW WORK SHALL BE REPAIRED, REPLACED AND PAID FOR BY THE INSTALLING CONTRACTOR, TO THE SATISFACTION OF THE ARCHITECT AND OWNER.

REFER TO ARCHITECTURAL DRAWINGS FOR EXISTING BUILDING CONSTRUCTION THAT IS TO REMAIN AND, THEREFORE, SUBJECT TO PATCHING, REPAIRING, AND REFINISHING.

CONTRACTOR SHALL BE RESPONSIBLE FOR THEIR OWN CLEAN-UP DURING CONSTRUCTION. IF CONTRACTOR FAILS TO PROVIDE SUCH CLEAN-UP, THE ARCHITECT/ENGINEER WILL DIRECT ANOTHER CONTRACTOR TO PERFORM THE CLEAN-UP AND THE NEGLIGENT CONTRACTOR SHALL PAY THE ASSOCIATED BACK-CHARGES AS DEEMED APPROPRIATE BY THE ARCHITECT/ ENGINEER.

CONTRACTOR SHALL FURNISH MATERIALS AND USE INSTALLATION METHODS SUITABLE FOR THE ENVIRONMENTAL CONDITIONS OF THE AREA IN WHICH EQUIPMENT, FIXTURES AND DEVICES ARE INSTALLED.

IT SHALL BE THE CONTRACTOR'S RESPONSIBILITY TO MAINTAIN CODE REQUIRED SPACINGS FOR ITEMS SUCH AS SPRINKLER HEADS.

CONTRACTOR SHALL PROVIDE SLEEVES IN BEAMS, FLOORS, COLUMNS AND WALLS AS SHOWN ON THE DRAWINGS, AS REQUIRED BY JOB SITE CONDITIONS, AND/OR AS SPECIFIED, WHEN INSTALLING THEIR WORK. ALL BEAMS AND COLUMNS WHICH ARE REQUIRED TO BE SLEEVED SHALL BE CUT AND REINFORCED AS REQUIRED BY FIELD CONDITIONS AND LOCATIONS AND SIZES SHALL BE CHECKED AND APPROVED BY ARCHITECT BEFORE CONTRACTOR CUTS ANY STRUCTURAL BUILDING MEMBER.

CONTRACTOR SHALL REFER TO THE ARCHITECTURAL AND STRUCTURAL CONTRACT DRAWINGS (BEFORE SUBMITTING THEIR BIDS) TO FAMILIARIZE THEMSELVES WITH THE EXTENT OF THE GENERAL CONTRACTORS WORK, CEILING HEIGHTS AND CLEARANCE FOR INSTALLING THEIR WORK.

SYSTEM INSTALLATION SHALL COMPLY WITH ALL APPLICABLE CODES AND ILLINOIS PLUMBING CODE -2004.

III. VISIT TO SITE

ATTENTION IS DIRECTED TO THE NECESSITY FOR CONTRACTOR TO VISIT THE SITE AND EXAMINE ALL CONDITIONS AFFECTING THE PROPER EXECUTION OF THIS CONTRACT. SUBMISSION OF PROPOSALS SHALL BE CONSIDERED EVIDENCE THAT THE CONTRACTOR HAS VISITED AND EXAMINED THE SITE.

NO EXTRA PAYMENT WILL BE ALLOWED THE CONTRACTOR FOR EXTRA WORK CAUSED BY FAILURE TO VISIT, EXAMINE AND CLARIFY.

IV. LAWS, ORDINANCES AND REGULATIONS

ALL SYSTEMS SHALL CONFORM IN FULL AND/OR PART SHALL CONFORM TO ALL PERTINENT LAWS, ORDINANCES AND REGULATIONS OF ALL BODIES HAVING JURISDICTION AT ALL GOVERNING LEVELS, NOTWITHSTANDING ANYTHING IN THESE DRAWINGS OR SPECIFICATIONS

TO THE CONTRARY. IN CASE OF CONFLICT BETWEEN GOVERNING LEVELS, THE MORE STRINGENT LAWS SHALL APPLY.

THE CONTRACTOR SHALL PAY ALL FEES AND OBTAIN AND PAY FOR ALL PERMITS AND INSPECTIONS REQUIRED BY ANY AUTHORITY HAVING JURISDICTION IN CONNECTION WITH HIS WORK.

WHERE APPLICABLE, ALL NEW MATERIAL SHALL BEAR THE UNDERWRITER'S SEAL OF APPROVAL, AS WELL AS THOSE SEALS OF ALL MUNICIPALITIES HAVING JURISDICTION. CERTIFICATES TO THIS AFFECT TO BE FURNISHED TO ARCHITECT UPON REQUEST.

V. WORKMANSHIP

ALL WORK TO BE PERFORMED SHALL BE DONE BY QUALIFIED MECHANICS. ALL MECHANICS IN THE EMPLOY OF THIS CONTRACTOR ON THIS PROJECT SHALL BE SKILLED IN THE PHASES OF THE WORK TO WHICH THEY ARE USED.

ALL WORK MUST BE DONE IN WORKMANLIKE MANNER TO THE COMPLETE SATISFACTION OF THE ARCHITECT. ALL MATERIAL SHALL BE NEW, OF THE QUALITY SPECIFIED, FREE FROM DEFECTS AND IN FIRST-CLASS CONDITION. ALL VERTICAL PIPE SHALL BE PLUMB.

VI. MATERIALS AND EQUIPMENT

ALL MATERIALS AND EQUIPMENT SHALL BE NEW AND SHALL CONFORM TO THE GRADE, QUALITY AND STANDARD SPECIFIED HEREIN. ALL EQUIPMENT OFFERED UNDER THESE SPECIFICATIONS SHALL BE LIMITED TO PRODUCTS REGULARLY PRODUCED AND RECOMMENDED FOR SERVICE, IN ACCORDANCE WITH ENGINEERING DATA, RATINGS OR OTHER COMPREHENSIVE LITERATURE MADE AVAILABLE TO THE PUBLIC AND IN EFFECT AT THE TIME OF OPENING OF BIDS.

EQUIPMENT SHALL BE INSTALLED IN STRICT ACCORDANCE WITH MANUFACTURER'S INSTRUCTIONS FOR TYPE AND CAPACITY OF EACH PIECE OF EQUIPMENT USED.

UNLESS INDICATED OTHERWISE, THE ARCHITECT/ENGINEER MAKES NO REPRESENTATION AS TO WHETHER OR NOT ANY HAZARDOUS OR CONTAMINATED MATERIALS (INCLUDING BUT NOT LIMITED TO ASBESTOS, PCB'S, CONTAMINATED SOILS, ETC.) ARE PRESENT WITHIN THE EXISTING BUILDING OR ON THE SITE. WORK SHOWN ON THE DRAWINGS AND/OR INDICATED IN THE SPECIFICATIONS SHALL NOT BE CONSTRUED TO CALL FOR CONTACT WITH ANY OF THESE MATERIALS. IF THESE MATERIALS ARE ENCOUNTERED OR SUSPECTED, THE CONTRACTOR SHALL NOT DISTURB THEM AND SHALL CONTACT THE ARCHITECT/ENGINEER IMMEDIATELY.

SYSTEM INSTALLATION SHALL COMPLY WITH ALL APPLICABLE CODES.

VII. COORDINATION WITH OTHER TRADES

THE CONTRACTOR SHALL BE RESPONSIBLE FOR COORDINATING HIS WORK WITH THAT WORK OF THE OTHER TRADES. CONTRACTOR IS COMPLETELY RESPONSIBLE IF FAILURE ON HIS PART TO COORDINATE EFFORTS RESULTS IN EXTRA WORK HAVING TO BE DONE TO COMPLETE A TASK. AS SUCH, HIS FAILURE SHALL NOT BE THE BASIS FOR ANY EXTRA CHARGE AGAINST THE OWNER.

CONTRACTOR SHALL CHECK DRAWINGS OF OTHER TRADES TO VERIFY THAT SPACES IN WHICH THEIR WORK WILL BE INSTALLED IS CLEAR OF OBSTRUCTIONS. WORK SHALL BE INSTALLED TO MAINTAIN MAXIMUM HEADROOM AND SPACE CONDITION AT ALL POINTS IN THE BUILDING. WHERE HEADROOM OR SPACE CONDITIONS APPEAR INADEQUATE, CONTRACTOR SHALL NOTIFY ARCHITECT/ENGINEER BEFORE PROCEEDING WITH THE INSTALLATION OF THEIR WORK.

CONTRACTOR SHALL FURNISH OTHER TRADES ADVANCE INFORMATION AND/OR SHOP DRAWINGS ON LOCATIONS AND SIZES OF PIPING, EQUIPMENT, FRAMES, BOXES, SLEEVES AND OPENINGS, ETC. NEEDED FOR THEIR WORK TO PERMIT OTHER TRADES AFFECTED TO INSTALL THEIR WORK PROPERLY AND WITHOUT DELAY.

WHERE THERE IS EVIDENCE THAT WORK OF ONE TRADE WILL INTERFERE WITH WORK OF OTHER TRADES, ALL TRADES SHALL MEET ON JOB SITE TO WORK OUT SPACE CONDITIONS, AND MAKE SATISFACTORY ADJUSTMENTS TO INSTALLATION OF THE NEW WORK. CONTRACTOR SHALL VERIFY EXACT LOCATIONS OF ALL PLUMBING AND FIRE PROTECTION DEVICES AND EQUIPMENT PRIOR TO ROUGH-IN WITH FIELD CONDITIONS, SHOP DRAWINGS AND WORK OF OTHER TRADES. EACH CONTRACTOR SHALL BE RESPONSIBLE, AT THEIR OWN EXPENSE, FOR THE REMOVAL AND REINSTALLATION OF ANY PART OF THEIR WORK IF SAME WAS INSTALLED WITHOUT CONSULTING WITH OTHER TRADES BEFORE INSTALLING THEIR WORK.

VIII. SHOP DRAWINGS

THE CONTRACTOR IS REQUIRED TO SUBMIT FIVE (5) SETS OF SHOP DRAWINGS FOR MATERIAL ITEMS SPECIFICALLY DESIGNATED IN THIS SPECIFICATION AND/OR CALLED OUT FOR ON THE DRAWINGS. CONTRACTOR IS CAUTIONED THAT ANY MATERIAL ITEMS PURCHASED PRIOR TO APPROVAL OF SHOP DRAWINGS ARE PURCHASED AT CONTRACTOR'S OWN RISK AND MAY BE SUBJECT TO REJECTION BY THE ARCHITECT/ ENGINEER. SHOP DRAWINGS ARE TO BE SUBMITTED TO THE GENERAL CONTRACTOR FOR HIS FORWARDING.

PRODUCT SUBMITTAL SHALL BE PREPARED IN AN ORGANIZED, LEGIBLE FORMAT WITH COVER SHEET INDICATING PROJECT, LOCATION, DATE, CONTRACTOR(S) AND ENGINEER. INDIVIDUAL BLANK SPACES OF MINIMUM 5 INCH BY 5 INCH SIZE FOR APPROVAL STAMPS FROM GENERAL CONTRACTOR, ARCHITECT AND ENGINEER.

ALL PRODUCTS SPECIFIED HEREIN OR ON THE DRAWINGS SHALL BE SUBMITTED WITH THE SAME PRODUCT TAG THAT IS USED IN THE CONSTRUCTION DOCUMENTS. WHERE A PRODUCT TAG IS NOT USED, THE SUBMITTAL SHALL REFERENCE THE PARAGRAPH OF THIS SPECIFICATION FOR WHICH THE PRODUCT IS BEING SUBMITTED.

REPRODUCTION OF THE CONTRACT DOCUMENTS FOR SUBMITTAL PURPOSES IS NOT ACCEPTABLE.

ALL SUBMITTALS WHICH ARE NOT SUBMITTED IN ACCORDANCE WITH THESE REQUIREMENTS WILL BE REJECTED WITHOUT ANY ALLOWANCES MADE FOR DELAYS THAT MAY BE INCURRED.

IX. PIPING INSULATION

PIPING INSULATION ON CONDENSATE DRAIN PIPING, DOMESTIC HOT WATER AND COLD WATER PIPING TO BE RIGID MOLDED FIBERGLASS WITH "K" VALUE OF .24 AT 75 DEGREES F. WITH VAPOR BARRIER JACKET WHITE KRAFT PAPER WITH FIBER YARN ON ALUMINIZED FILM. INSULATION THICKNESS TO BE 1 INCH.

ALL INSULATION TO HAVE MAXIMUM 25/50 FLAME SPREAD/SMOKE DEVELOPED. SAME COMPONENT RATING FOR ACCESSORIES (ADHESIVES, MASTIC AND CEMENTS FOR FITTINGS).

X. PLUMBING PIPING

DOMESTIC WATER PIPING: ASTM B88 HARD DRAWN, TYPE-L, COPPER WITH SOLDER JOINT WROUGHT COPPER FITTINGS; OPTION TO USE CLASS 52 DUCTILE IRON FOR UNDERGROUND WATER SUPPLY MAIN.

SANITARY AND SANITARY VENT PIPING: ASTM A74, SERVICE WEIGHT CAST IRON WITH HUB AND SPIGOT COMPRESSION JOINING; OPTION FOR NO-HUB MECHANICAL CLAMP JOINT SHALL BE AVAILABLE FOR ABOVE GROUND APPLICATIONS, OR SCH-40 PVC.

DIELECTRIC UNIONS OR COUPLINGS SHALL BE USED WHERE JOINING PIPING OF DISSIMILAR METALS.

VALVES:
BALL VALVES (BV) UP TO 2 INCHES: 600 PSI WOG, BRONZE BODY, STAINLESS STEEL FULL PORT BALL, TEFLON SEATS AND STUFFING BOX RING, LEVER HANDLE AND SOLDER ENDS.

DOMESTIC WATER PIPING DISINFECTION: CHLORINATION OF PIPING SYSTEM IN ORDER TO COMPLY WITH STATE OF ILLINOIS SAFE DRINKING WATER STANDARDS.

PIPING TESTING: PNEUMATIC AND HYDROSTATIC TESTING REQUIRED FOR THE ABOVE REFERENCED SYSTEMS.

XI. PLUMBING SPECIALTIES

ACCEPTABLE MANUFACTURERS - PLUMBING SPECIALTIES:
A. ANCON
B. J.R. SMITH
C. WADE CO.

FD-1: MODEL W-1100-AX6-1-27 NOT FLASHED MANUFACTURED BY WADE CO.

FCO: MODEL W-6000-5-118 MANUFACTURED BY WADE CO.

WCO: MODEL W-8460-R5 MANUFACTURED BY WADE CO.

CO: MODEL W-8550-A MANUFACTURED BY WADE CO.

WATER HAMMER ARRESTORS: FIT WATER SUPPLY TO EACH FIXTURE OR GROUP OF FIXTURES WITH AIR CHAMBER; AIR CHAMBERS SAME SIZE AS SUPPLY LINE OR 3/4 INCH MINIMUM 18 INCHES LONG.

XII. PLUMBING FIXTURES

ACCEPTABLE MANUFACTURERS - PLUMBING FIXTURES:
A. AMERICAN STANDARD
B. ELJER PLUMBINGWARE
C. KOHLER CO.
D. GERBER.
C. TOTO.

ACCEPTABLE MANUFACTURERS - FLUSH VALVES:
A. SLOAN VALVE CO.
B. NO SUBSTITUTIONS.

ACCEPTABLE MANUFACTURERS - FAUCET TRIM, SUPPLIES & STOPS:
A. CHICAGO FAUCET CO.
B. AMERICAN STANDARD.
C. MOEN.
D. DELTA.

ACCEPTABLE MANUFACTURERS - SINKS AND SINK DRAINS:
A. ELKAY MANUFACTURING CO.
B. JUST MANUFACTURING CO.
C. NO SUBSTITUTIONS.

ACCEPTABLE MANUFACTURERS - TOILET SEATS:
A. BEAMIS.
B. CHURCH.
C. OLSONITE.

WC-1: WATER CLOSET (WC-1)
A. BOWL: ANSI A112.19.2; HANDICAPPED ACCESSIBLE FLOOR MOUNTED, 1.28 GALLON FLUSH LOW WATER CONSUMPTION WHITE VITREOUS CHINA CLOSET BOWL, WITH ELONGATED RIM, FLUSH TANK, FLUSHING LEVER ORIENTED FOR HANDICAPPED ACCESSIBILITY AND CHINA BOLT CAPS; MODEL 114-112 AS MANUFACTURED BY MANSFIELD.

B. SEAT: ANTI-MICROBIAL SOLID WHITE PLASTIC, CLOSED FRONT, COVER, SELF-SUSTAINING STAINLESS STEEL HINGE AND BRASS BOLTS.

C. PROVIDE LOOSE KEY STOP WITH BRAIDED STAINLESS STEEL FLEX CONNECTOR SIMILAR TO QUICK'N EASY SUPPLY KITS AS MANUFACTURED BY WATTS.

L-1: LAVATORY (L-1)
A. BASIN: ANSI A112.19.2; WHITE VITREOUS CHINA; HANDICAPPED WAL-HUNG LAVATORY 21 X 18 INCH MINIMUM, WITH 4 INCH HIGH BACK, DRILLINGS ON 4 INCH CENTERS, OVERFLOW AND SOAP DEPRESSIONS; MODEL LUCERNE 0355.012 AMERICAN STANDARD, NO SUBSTITUTIONS.

B. TRIM: ANSI A112.18.1; CHROME PLATED VANDAL RESISTANT COMBINATION SUPPLY FITTING WITH OFFSET OPEN STRAINER AND TAILPIECE, 0.5 GPM WATER AERATOR, VANDAL PROOF PUSH TILT SELF-CLOSING MATERIAL HANDLES. CHROME PLATED 17 GAUGE BRASS P-TRAP (INSTALLED PARALLEL WITH WALL) AND ARM WITH ESCUTCHEON; MANUFACTURED BY DELTA. PROVIDE UNDER SINK PROTECTIVE PIPE COVER FOR P-TRAP, TAILPIECE, ANGLE VALVES, AND SUPPLY TUBING; MODEL 103 AS MANUFACTURED BY TRUEBRO, INC..

C. WALL MOUNTED CARRIER: ANSI A112.6.1; CAST IRON AND STEEL FRAME, LUGS FOR WALL ATTACHMENT, EXPOSED BRACKET SUPPORTS, BEARING PLATE, AND STUDS.

D. STOPS: CHROME PLATED BRASS QUARTER TURN STOP, 1/2 INCH O.D. FLEXIBLE RISER AND FEMALE COMPRESSION INLET.

SK-1: SINK (SK-1)
A. BOWL: ANSI A112.19.3; SINGLE COMPARTMENT 25 X 21 X 7 INCH OUTSIDE DIMENSIONS, 18 GAUGE THICK, TYPE 302 STAINLESS STEEL, SELF-RIMMING WITH UNDER COATING, 3-1/2 INCH STAINLESS STEEL CRUMB CUB AND DRAIN, 1-1/2 INCH CHROME PLATED CAST BRASS P-TRAP LEDGE BACK 3-HOLE DRILLED FOR TRIM; MODEL LRAD2521-LK-35 AS MANUFACTURED BY ELKAY MANUFACTURING COMPANY.

B. FAUCET: ANSI A112.18.1; ADA COMPLIANT SINGLE HANDEL CHROME PLATED BRASS SUPPLY FITTING WITH SWING SPOUT, 1.5 GPM WATER AERATOR, LEVER HANDEL; MODEL 100LF-HDF AS MANUFACTURED BY DELTA FAUCET.

C. STOPS: ANSI A112.18.1; CHROME PLATED BRASS LOOSE KEY STOP WITH RENEWABLE AND INTERCHANGEABLE SLOW COMPRESSION OPERATING UNIT, 1/2 INCH O.D. FLEXIBLE RISER AND FEMALE COMPRESSION INLET; MODEL 1027 MANUFACTURED BY CHICAGO FAUCET CO.

UR-1: URINAL (UR-1)
A. ANSI A112.19.2; WHITE VITREOUS CHINA, WALL HUNG WASHOUT URINAL WITH SHIELDS, INTEGRAL TRAP, REMOVABLE STAINLESS STEEL STRAINER, 3/4 INCH TOP INLET SPUD, WALL MOUNTED STEEL SUPPORT HANGER AND 2 INCH BRASS FEMALE THREADED OUTLET WITH GASKET AND HANGER BOLTS; MODEL DEXTER K-5016-ET MANUFACTURED BY KOHLER.

B. FLUSH VALVE: ANSI A112.19.6; EXPOSED CHROME PLATED, SENSOR ACTIVATED, DIAPHRAGM TYPE URINAL FLUSH VALVE ASSEMBLY WITH HARD WIRED IN WALL SENSOR AND TRANSFORMER. VALVE BODY, TAILPIECE, AND CONTROL STOP WILL BE IN CONFORMANCE WITH ASTM ALLOY CLASSIFICATION FOR SEMI-RED BRASS. FLUSH VALVE ASSEMBLY TO BE CONSTRUCTED WITH DUAL FILTERED DIAPHRAGM FOR FLUSH VALVE ACCURACY, SKIRTED HIGH BACK PRESSURE VACUUM BREAKER WITH BOTTOM HEX COUPLING NUT, CHECK STOP WITH FREE SPINNING VANDAL RESISTANT CAP, SWEAT SOLDER ADAPTER KIT, AND CAST WALL FLANGE WITH SET SCREW; MODEL ROYAL 8180-1.0 MANUFACTURED BY SLOAN VALVE CO.

C. WALL MOUNTED CARRIER: ANSI A112.18.1; STEEL FRAME WITH TUBULAR LEGS, LUGS FOR FLOOR AND WALL ATTACHMENT, THREADED FIXTURE STUDS FOR FIXTURE HANGER AND BEARING PLATE. AND FEMALE COMPRESSION INLET; MODEL 1027 MANUFACTURED BY CHICAGO FAUCET CO.

SSR-1: SERVICE SINK (SSR-1)
A. BOWL: ANSI A112.19.1; 24 X 24 X 12 INCHES DEEP, PRECAST TERRAZZO SINK, WITH 12 INCH HIGH SIDES, STAINLESS STEEL CURB CAPS, CHROME PLATED STRAINER, CAST IRON P-TRAP WITH ADJUSTABLE FLOOR FLANGE; MODEL TSB-100 MANUFACTURED BY FIAT CORP.

B. TRIM: ANSI A112.18.1; EXPOSED WALL TYPE CHROME PLATED SUPPLY WITH LEVER HANDLE SPOUT, WALL BRACE, VACUUM BREAKER, HOSE END SPOUT, STRAINERS, ECCENTRIC ADJUSTABLE INLETS, INTEGRAL SCREWDRIVER STOPS WITH COVERING CAPS AND ADJUSTABLE THREADED WALL FLANGES; MODEL 897-CP MANUFACTURED BY CHICAGO FAUCET CO.

C. HOSE CLAMP, HOSE, AND MOP HANGER: 1/2 INCH PLAIN END REINFORCED RUBBER HOSE WITH WALL MOUNTED HOSE CLAMP AND STAINLESS STEEL WALL PLATE WITH MOP HOOKS; MODEL 832-AA AND 899-CC MANUFACTURED BY FIAT PRODUCTS CORP.

LOOSE KEY STOPS:
A. STOPS: A112.18.1; CHROME PLATED BRASS LOOSE KEY STOPS WITH RENEWABLE AND INTERCHANGEABLE SLOW COMPRESSION OPERATING UNIT, 1/2 INCH O.D. FLEXIBLE RISER AND 1/2 INCH FEMALE COMPRESSION INLET; MODEL 1027 MANUFACTURED BY CHICAGO FAUCET CO.

PROVIDE LOOSE KEY STOPS AND P-TRAPS FOR EACH FIXTURE. P-TRAPS WILL BE REQUIRED TO BE INSTALLED PARALLEL WITH WALL IN ORDER TO ACCOMMODATE OFF-SET TAILPIECE'S ON HANDICAP LAVATORIES.

INSULATE TRAPS AND FIXTURE STOPS IN ACCORDANCE WITH ADA REQUIREMENTS.

XIII. PLUMBING EQUIPMENT

ACCEPTABLE MANUFACTURERS - EXPANSION TANKS:
A. AMTROL.
B. BELL & GOSSETT/ITT.
C. JOHN WOOD CO.

DXT-1: PROVIDE 4.4 GAL. CAPACITY EXPANSION TANK RATED TO 150 PSIG, PRE-CHARGED TO 70 PSIG WITH FLEXIBLE EPDM DIAPHRAGM SUITABLE FOR POTABLE WATER SUPPLY; MODEL THERM-X-TROL ST-12 AS MANUFACTURED BY AMTROL.

PROVIDE SUPPORTS TO ANCHOR EXPANSION TANK TO ROOF STRUCTURE.

XIV. FIRE STOPPING

CONTRACTOR SHALL FIRE STOP ALL PENETRATIONS THRU FIRE RATED WALLS, PARTITIONS, ROOFS AND/OR FLOORS SO THAT THE INTEGRITY OF THE FIRE RATING IS NOT COMPROMISED BY THE CONTRACTOR'S INSTALLATION OF ANY PIPE. FIRE STOPPING METHODS AND MATERIALS SHALL CONFORM TO LOCAL CODE AUTHORITY REQUIREMENTS. AS A MINIMUM, CONTRACTOR SHALL GROUT PIPES IN PENETRATION RATED PARTITION/FLOOR CONSTRUCTION WITH NON-SHRINK GROUT SO THAT ALL OPEN SPACES ARE FILLED IN SOLIDLY. CONTRACTOR SHALL REFER TO ARCHITECTURAL PLANS FOR THE LOCATION OF ALL FIRE RATED CEILINGS, PARTITIONS AND WALLS.

XV. GUARANTEE

THIS CONTRACTOR SHALL UNCONDITIONALLY GUARANTEE IN WRITING ALL MATERIAL, EQUIPMENT AND WORKMANSHIP FOR A PERIOD OF ONE YEAR FROM DATE OF ACCEPTANCE BY OWNER. THE CONTRACTOR SHALL PROVIDE FREE SERVICE FOR ALL EQUIPMENT INVOLVED IN HIS CONTRACT DURING THIS GUARANTEE PERIOD.

THE GUARANTEE SHALL INCLUDE RESTORATION TO ITS ORIGINAL CONDITION OF ALL ADJACENT WORK THAT MUST BE DISTURBED IN FULFILLING THIS GUARANTEE.

ALL SUCH REPAIRS AND/OR REPLACEMENTS SHALL BE MADE WITHOUT DELAY AND AT THE CONVENIENCE OF THE DEVELOPER AND TENANT.

XVI. SUBSTITUTIONS

APPROVALS OF SUBSTITUTIONS, FOR "APPROVED EQUAL", MUST BE MADE IN WRITING AND SUBSTITUTIONS MUST BE APPROVED BEFORE INSTALLATION. INSTALLATION WITHOUT PRIOR APPROVAL MAY RESULT IN CONTRACTOR REMOVING SUBSTITUTION AND REPLACING IT WITH SPECIFIED ITEM AT HIS EXPENSE.

APPROVAL MAY BE GIVEN BY ENGINEER ONLY.

OAS,LLC
O'HIGGINS AND ARNOLD SUSTAINABILITY, LLC
769 HEARTLAND DR., UNIT A SUGAR GROVE, ILLINOIS 60554

Larson & Darby Group
Architects Engineers Planners
Rockford Office - 4949 Harrison Ave., Suite 300, P.O.Box 5307 Rockford, IL 61125 Tel (815) 484-0799 Fax (815) 229-9657

CITY OF ROCKFORD
120 N 3RD STREET
ROCKFORD, ILLINOIS

COPYRIGHT 2014
All drawn and written information appearing herein shall not be duplicated, disclosed, or otherwise used without the written consent of Larson & Darby Group

ISSUED FOR:	DATE
ISSUED FOR CONSTRUCTION	06-20-14

DRAWN	APPROVED
CRF	KBO

DATE: 06-26-2014
PROJECT NUMBER 24043
SHEET NUMBER P0.3

PLOTTED BY: RUBEN DELAFUENTE DATE PLOTTED: 6/30/2014 11:14 AM FILE PATH AND NAME: P:\037-A-1 Rockford Wellness Center Plumbing Design\P\037g1-P03

OAS,LLC
O'HIGGINS AND ARNOLD SUSTAINABILITY, LLC
700 HEARTLAND DR., UNIT A SUGAR GROVE, ILLINOIS 60554

GENERAL NOTES

1. ALL NEW DOMESTIC WATER PIPING TO BE DISINFECTED PER THE ILLINOIS PLUMBING CODE.

KEYED NOTES

1. SANITARY PIPING TO BE RUN EXPOSED SUPPORTED FROM WALL.
2. DROP UNDER FLOOR.
3. SAW CUT FLOOR FOR SANITARY LINE. CONTRACTOR TO VERIFY NO PIPING OR CONDUITS ARE BURIED IN CONCRETE BEFORE CUTTING.
4. CONTRACTOR TO LOCATE EXISTING SANITARY DRAIN AND CONNECT TO IT WITH NEW SANITARY FROM NEW TOILET ROOMS.
5. PROVIDE 120V ASCO TWO-POSITION SHUT-OFF VALVE FOR TEST TOILET. ON-OFF SWITCH TO BE LOCATED IN LAB.
6. PROVIDE STUB OUT FOR FUTURE BREAK ROOM.
7. REMOVE EXISTING WATER SERVICE UNDER COUNTER TOP. REMOVE WATER METER AND BFP. COORDINATE WITH CITY TO SHUT-OFF SERVICE AT MAIN.

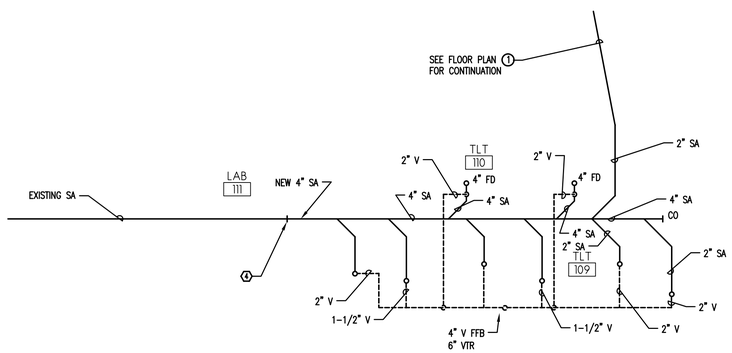

2 UNDER FLOOR PLAN - PLUMBING
SCALE: 1/4" = 1'-0"

North

NOTE

1. FLOORING IN THIS AREA MUST BE SAW CUT FOR INSTALLATION OF ALL UNDERGROUND SANITARY AND VENT LINES. CONTRACTOR TO VERIFY LOCATION OF ANY PIPING AND ENSURE THAT NO CONDUITS ARE BURIED IN CONCRETE BEFORE CUTTING.

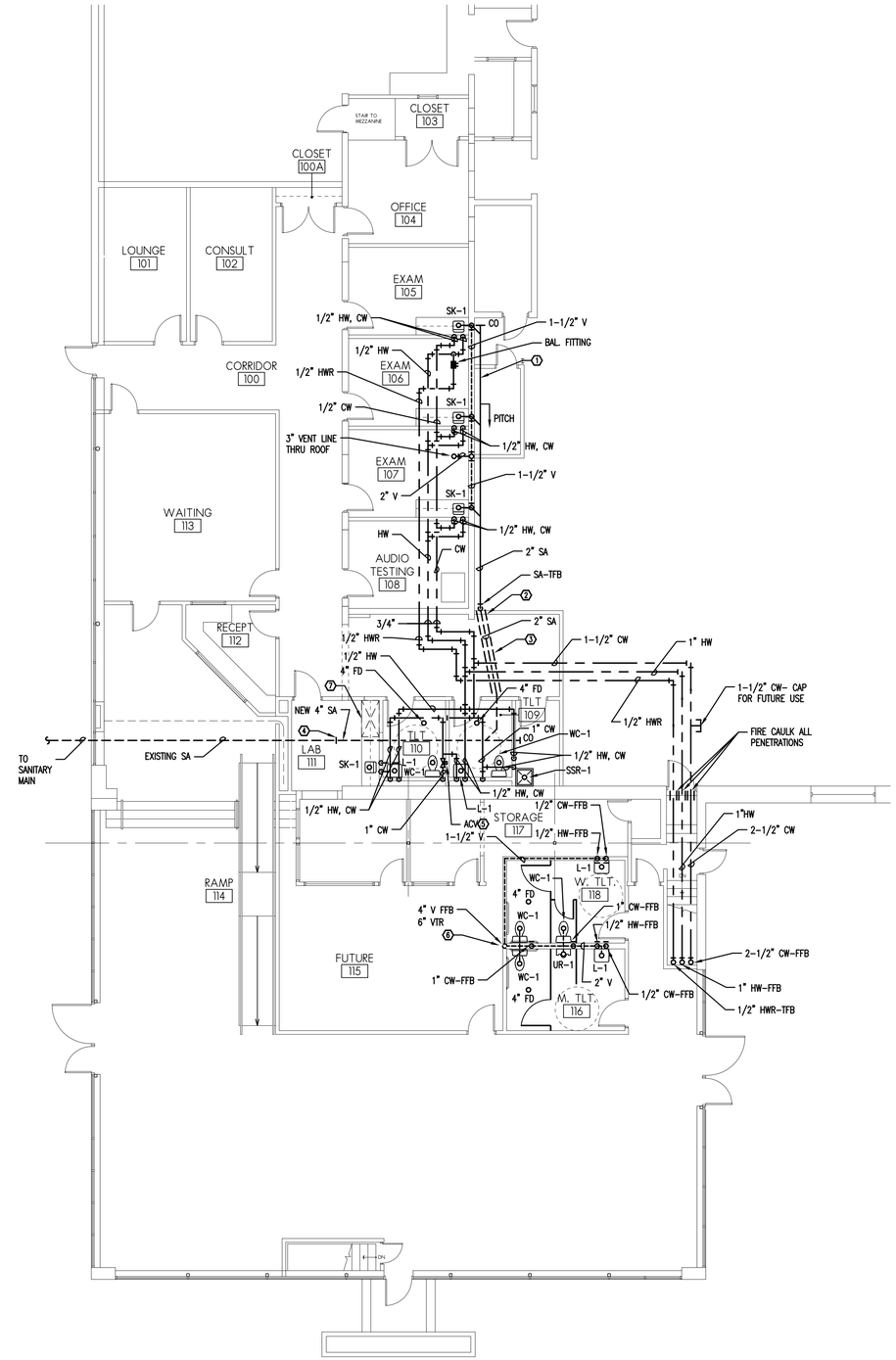

1 FLOOR PLAN - PLUMBING
SCALE: 1/8" = 1'-0"

North

Larson & Darby Group
Architects Engineers Planners
Rockford Office - 4949 Harrison Ave., Suite 100, P.O.Box 5207 Rockford, IL 61125 Tel (815) 484-0799 Fax (815) 229-9607

CITY OF ROCKFORD
120 N 3RD STREET
ROCKFORD, ILLINOIS

COPYRIGHT 2014
All drawn and written information appearing herein shall not be duplicated, disclosed, or otherwise used without the written consent of Larson & Darby Group

ISSUED FOR: DATE
ISSUED FOR CONSTRUCTION 06-20-14

DRAWN CRF
APPROVED KBO

DATE: 06-26-2014
PROJECT NUMBER 24043
SHEET NUMBER P1.1

PLOTTED BY: RUBEN DELAFUENTE DATE PLOTTED: 6/30/2014 11:14 AM FILE PATH AND NAME: P:\037-A-1 Rockford Wellness Center Plumbing Design\Pl\037a1-P11

OAS,LLC
O'HIGGINS AND ARNOLD SUSTAINABILITY, LLC
700 HEARTLAND DR., UNIT A SUGAR GROVE, ILLINOIS 60554

1 FLOOR PLAN - MECHANICAL
SCALE: 1/8" = 1'-0"

8' 0' 4' 8' 16'
(IN FEET)
1/8" = 1'-0"

North

KEYED NOTES

1. REMOVE EXISTING CONCENTRIC SUPPLY / RETURN DUCT DROP. RECONFIGURE SUPPLY AND RETURN FROM UNIT SHOWN.

2. CONTRACTOR TO SERVICE EXISTING UNIT(S).
   - A. CHANGE FILTERS.
   - B. CHANGE BELTS IF APPLICABLE.
   - C. CHECK REFRIGERANT AND ADD IF NECESSARY.
   - D. CHECK SAFETY CONTROLS ON BURNER.
   - E. CLEAN BURNER.
   - F. PROVIDE NEW PROGRAMMABLE THERMOSTAT AND WIRING.

3. REMOVE EXISTING ROOF TOP UNIT AND ALL COMPONENTS. EXISTING FOOR CURB TO REMAIN. PROVIDE NEW RTU-1 AS SCHEDULED AND CURB ADAPTER.

Larson & Darby Group
Architects Engineers Planners
Rockford Office - 4949 Harrison Ave., Suite 100, P.O.Box 5207 Rockford, IL 61125 Tel (815) 484-0799 Fax (815) 229-9657

CITY OF ROCKFORD
120 N 3RD STREET
ROCKFORD, ILLINOIS

COPYRIGHT 2014
All drawn and written information appearing herein shall not be duplicated, disclosed, or otherwise used without the written consent of Larson & Darby Group

ISSUED FOR: DATE
ISSUED FOR CONSTRUCTION 06-20-14

DRAWN CRF
APPROVED KBO

DATE: 06-26-2014
PROJECT NUMBER 24043
SHEET NUMBER M1.1

PLOTTED BY: RUBEN BEAUDENTE DATE PLOTTED: 6/30/2014 10:25 AM FILE PATH AND NAME: P:\037-A-2 Rockford Wellness Center Mech-Elec Design\M\037a2-M11

OAS,LLC
O'HIGGINS AND ARNOLD SUSTAINABILITY, LLC
700 HEARTLAND DR., UNIT A SUGAR GROVE, ILLINOIS 60554

IMC 2009 VENTILATION

ROOM NUMBER	ROOM NAME	OCCUPANCY CLASSIFICATION	FLOOR AREA (SQFT.)	NUMBER OF PEOPLE	REQUIRED VENTILATION (CFM/PERSON) (TABLE 403.3)	ACTUAL SUPPLY CFM	ACTUAL EXHAUST CFM	SYSTEMS	NOTES
100	CORRIDOR	CORRIDORS	792	–	.06 CFM PER SQFT.	450	–	RTU – 1E	–
100A	CLOSET	STORAGE	14	–	–	–	–	RTU – 1E	–
101	LOUNGE	OFFICE	166	–	5 CFM PER PERSON	230	–	RTU – 1E	–
102	CONSULT	OFFICE	165	–	5 CFM PER PERSON	180	–	RTU – 1E	–
103	CLOSET	STORAGE	37	–	–	–	–	RTU – 1E	–
104	OFFICE	OFFICE	188	1	5 CFM PER PERSON	215	–	RTU – 1E	–
105	EXAM	MEDICAL PROCEEDURE RM.	138	3	15 CFM PER PERSON	125	–	RTU – 1E	–
106	EXAM	MEDICAL PROCEEDURE RM.	138	3	15 CFM PER PERSON	125	–	RTU – 1E	–
107	EXAM	MEDICAL PROCEEDURE RM.	138	3	15 CFM PER PERSON	125	–	RTU – 1E	–
108	AUDIO TESTING	MEDICAL PROCEEDURE RM.	138	3	15 CFM PER PERSON	125	–	RTU – 1E	–
109	TOILET	TOILET ROOM	63	–	70 CFM PER FIXTURE	50	70	RTU – 1E, EF – 1	–
110	TOILET	TOILET ROOM	63	–	70 CFM PER FIXTURE	50	70	RTU – 1E, EF – 1	–
111	LAB	MEDICAL PROCEEDURE RM.	101	2	15 CFM PER PERSON	70	70	RTU – 1E, EF – 1	–
112	RECEPTION	RECEPTION	91	3	5 CFM PER PERSON	130	–	RTU – 1E	–
113	WAITING	RECEPTION	420	13	5 CFM PER PERSON	800	–	RTU – 1E	–
114	RAMP / MAIN ENTRY	RECEPTION	2,780	–	5 CFM PER PERSON	3000	–	RTU – 2E & RTU – 3E	–
115	FUTURE	–	444	–	–	–	–	–	–
116	M. TOILET	TOILET ROOM	126	–	70 CFM PER FIXTURE	100	150	RTU – 3E, EF – 2	–
117	STORAGE /ST CLOSET	STORAGE	115	–	–	–	–	–	–
117B	STORAGE CLOSET	STORAGE	15	–	–	–	–	–	–
118	W. TOILET	TOILET ROOM	128	–	70 CFM PER FIXTURE	100	150	RTU – 3E, EF – 2	–
–	–	–		–	–	–	–	–	–
–	–	–		–	–	–	–	–	–
			6,260			–	–		

NOTES:

EXHAUST FAN SCHEDULE (EF)

GENERAL DATA					FAN DATA												
TAG	LOCATION	AREA SERVED	MANUFACTURER	MODEL	TYPE	DRIVE	DAMPER SIZE (IN.)	CFM	S.P. (IN.)	MAX. FAN RPM	BHP	MTR RPM	MTR HP	MTR PH	MTR VOLT	FAN CONTROLS	NOTES
EF 1	ROOF	TOILET 109, 110	GREENHECK	G-80-D	CENT.	DIRECT	10 X 10	280	.375	1550	.06	1750	1/20	1	208		1,2,3,4,12
EF 2	ROOF	TOILET 116, 118	GREENHECK	G-80-D	CENT.	DIRECT	10 X 10	300	.375	1550	.06	1750	1/20	1	208		1,2,3,4,12

NOTES:
1. PRE-FABRICATED ROOF CURB WITH COUNTERFLASHING CURB CAP.
2. BIRDSCREEN.
3. DISCONNECT SWITCH.
4. GRAVITY BACKDRAFT DAMPER.
5. MOTORIZED BACKDRAFT DAMPER.
6. TWO SPEED MOTOR.
7. TEFC MOTOR.
8. EXPLOSION PROOF MOTOR.
9. CORROSION RESISTANT COATING.
10. WALL HOUSING WITH GUARD.

☒ STARTER BY E.C.
Ⓡ RELAY BY BAS.
$ SWITCH WITH PILOT LIGHT BY E.C.
Ⓣ THERMOSTAT BY BAS.
11. FAN TO RUN CONTINOUSLY
12. TIME CLOCK CONTROL

DIFFUSER, GRILLE AND REGISTER (NECK SIZE / AIR QTY. (CFM))

TAG	MANUFACTURER	MODEL NUMBER	TYPE	SERVICE	MATERIAL	MAXIMUM NC	NOTES
A	TITUS	TMS	LAY-IN	SUPPLY	STEEL	25	1,3,5
B	TITUS	250	SURFACE CEILING	SUPPLY	STEEL	25	1,2,3,5,6
C	TITUS	50F	LAY-IN	RETURN	ALUMINUM	25	1,2,5
D	TITUS	350PL	SURFACE CEILING	EXHAUST	STEEL	25	1,2,3,5

NOTES:
1. OFF-WHITE BAKED ENAMEL FINISH.
2. CONTRACTOR TO DETERMINE BORDER TYPE.
3. OPPOSED BLADE DAMPER.
4. MOUNT 0 DEGREES TO HORIZONTAL.
5. ACCEPTABLE MANUFACTURERS: CARNES, TUTTLE & BAILEY, PRICE, TITUS, AND METALAIRE (NO SUBSTITUTIONS)
6. BORDER TYPE 1

GAS FIRED PACKAGED ROOFTOP UNIT SCHEDULE (RTU)

GENERAL DATA							DIMENSIONAL DATA (IN.)			SUPPLY FAN DATA						RETURN FAN DATA				CONDENSER COMPRESSOR DATA				CONDENSOR FAN DATA			HEATING CAPACITY DATA					COOLING CAPACITY DATA						ELECTRICAL DATA			FILTERS		
TAG	LOCATION	AREA SERVED	MANUFACTURER	MODEL NUMBER	TYPE	OPERATING WEIGHT (LB.)	LENGTH	WIDTH	HEIGHT	CFM	EXTERNAL SP (IN.)	TYPE	DRIVE	FAN RPM	MOTOR HP	TYPE	SPEEDS	FAN RPM	MOTOR HP	QUANTITY	SIZE (TONS)	UNLOADING STEPS	MIN. TURNDOWN	QUANTITY	EAT (°F)	A	INPUT (MBH)	OUTPUT (MBH)	STAGES	EAT (°F)	LAT (°F)	SENSIBLE (MBH)	TOTAL (MBH)	EAT (DB °F)	EAT (WB °F)	LAT (DB °F)	LAT (WB °F)	MCA	VOLT	PH	TYPE	FACE AREA (SQFT)	NOTES
RTU 1	ROOF	NORTH AREA	LENOX	KGA09254B	CV	1000				3000	1.2	CENT.	BELT	856	2.0	CENT	1	–	.33	2	7.5	2	–	2	95	4.8	130	104	2	65	105	58.1	88.2	80	67	55	56	45	208	3	TA		1,2

NOTES:
1. INCLUDE THE FOLLOWING ACCESSORIES: ECONOMIZER, POWER EXHAUST (FOR UNIT 7.5 & 8.5 TONS), CONVENTIONAL THERMOSTAT INTERFACE, 2 STAGE HEATING ON 7.5 & 8.5 TON UNITS, ALL UNITS TO BE HIGH EFFICIENCY AND R410A REFRIGERANT.
2. PROVIDE CURB ADAPTER TO UTILIZE EXISTING CURB.

Larson & Darby Group
Architects Engineers Planners
Rockford Office - 4949 Harrison Ave., Suite 100, P.O.Box 5207 Rockford, IL 61125 Tel (815) 484-0799 Fax (815) 229-9657

CITY OF ROCKFORD
120 N 3RD STREET
ROCKFORD, ILLINOIS

COPYRIGHT 2014
All drawn and written information appearing herein shall not be duplicated, disclosed, or otherwise used without the written consent of Larson & Darby Group

ISSUED FOR: DATE
ISSUED FOR CONSTRUCTION 06-26-14

DRAWN CRF
APPROVED KBO

DATE: 06-26-2014
PROJECT NUMBER 24043
SHEET NUMBER M2.0

PLOTTED BY: RUBEN DELAFUENTE DATE PLOTTED: 6/30/2014 10:25 AM FILE PATH AND NAME: P:\037-A-2 Rockford Wellness Center Mech-Elec Design\M\037a2-M20

MECHANICAL SYSTEM (HVAC) SYMBOLS

NEW PIPING
EXISTING TO REMAIN PIPING
G — NATURAL GAS
D — DRAIN LINE
LINE ARROW INDICATES DIRECTION OF FLOW
PIPE ELBOW (TURNED UP)
PIPE ELBOW (TURNED DOWN)
PIPE TEE DOWN (DROP)
PIPE TEE UP
PIPE TEE UP OR ANGLE
PIPE TEE DOWN OR ANGLE
PIPE TEE HORIZONTAL
90° ELBOW IN HORIZONTAL PIPE RUN
ANGLE ELBOW IN HORIZONTAL PIPE RUN
NC — NEW CONNECTION
SQUARE HEAD COCK
PRESSURE REDUCING VALVE
PIPE UNION (OR FLANGES IF 2 1/2" OR LARGER PIPE)
CO2 — CO2 SENSOR
T — WALL MOUNTED THERMOSTAT/SENSOR
S — SWITCH
NEW DUCTWORK
EXISTING TO REMAIN DUCTWORK
EXISTING TO BE REMOVED DUCTWORK
AIR SUPPLY FLOW
A NK SIZE / CFM — WALL OR DUCT MOUNTED SUPPLY REGISTER OR GRILLE (TOP NO. = SIZE OF FACE OR NECK, BOTTOM NO. = AMOUNT OF AIR, LETTER INDICATES TYPE).
B 18x12 NK / 500 CFM, C 24x12 NK / 500 CFM — BOTTOM MOUNTED REGISTER OR GRILLE.
24x12 — DUCT SIZE FREE AREA (1ST NUMBER IS DUCT WIDTH ON PLAN VIEW, 2ND NUMBER IS DUCT DEPTH IN PLAN VIEW.)
SUPPLY OR FRESH AIR DUCT UP
RETURN OR EXHAUST AIR DUCT UP
R / D — INCLINED RISE (R) OR DROP (D), ARROW IN DIRECTION OF AIR FLOW
90° ELBOW WITH TURNING VANES
W, R — SHORT RADIUS ELBOW (R=1/2 W)
W, R — LONG RADIUS ELBOW (R= W)
45°, L, VD, W — 90° BRANCH TAKE-OFF W/45 DEGREE ENTRY (L=1/4 W – 4" MIN.) W/VOLUME DAMPER IN BRANCH DUCT.

ROUND OR OVAL DUCT (——— INDICATES CENTER LINE OF DUCT)
A, B, L_2 — ROUND DUCT TRANSITION [L_2 = A–B (4" MIN.)]
ROUND DUCT UP
CROSS-SECTION OF ROUND DUCT
30° MAX. — SQUARE OR RECTANGLE DUCT TRANSITION
UNEQUAL SIZE (90° – T) ELBOW
EQUIPMENT TYPE / EQUIPMENT # — EQUIPMENT TAG
— PLAN NOTE REFERENCE NUMBER — PLAN NOTE TAG

OAS,LLC
O'HIGGINS AND ARNOLD SUSTAINABILITY, LLC
769 HEARTLAND DR., UNIT A SUGAR GROVE, ILLINOIS 60554

GENERAL NOTES FOR MECHANICAL WORK

A. DRAWINGS ARE GENERALLY DIAGRAMMATIC. ROUTING OF PIPING AND DUCTWORK AS SHOWN, DOES NOT INTEND TO SHOW EVERY RISE, DROP, OFFSET, FITTING NOR EVERY STRUCTURAL ELEMENT THAT MAY BE ENCOUNTERED DURING THE INSTALLATION OF THIS WORK. EACH CONTRACTOR SHALL MAKE ANY REQUIRED CHANGES FROM THE GENERAL ROUTING SHOWN ON THESE DRAWINGS, SUCH AS OFFSETS, BENDS OR CHANGES IN ELEVATION DUE TO COORDINATION WITH THE WORK OF OTHER TRADES AND BUILDING CONSTRUCTION. ALL CHANGES SHALL BE MADE WITHOUT ADDITIONAL COST TO THE OWNER OR DELAY IN COMPLETION DATE OF THE PROJECT.

B. IT IS INTENDED THAT EQUIPMENT SHALL BE LOCATED SYMMETRICALLY WITH THE ARCHITECTURAL ELEMENTS OF THE BUILDING, NOTWITHSTANDING THE FACT THAT LOCATIONS INDICATED BY THESE DRAWINGS MAY BE DISTORTED FOR CLEARNESS OF PRESENTATION.

C. CONTRACTOR SHALL CHECK DRAWINGS OF OTHER TRADES TO VERIFY THAT SPACES IN WHICH THEIR WORK WILL BE INSTALLED ARE CLEAR OF OBSTRUCTIONS. WORK SHALL BE INSTALLED TO MAINTAIN MAXIMUM HEADROOM AND SPACE CONDITION AT ALL POINTS IN THE BUILDING. WHERE HEADROOM OR SPACE CONDITIONS APPEAR INADEQUATE, CONTRACTOR SHALL NOTIFY ARCHITECT/ENGINEER BEFORE PROCEEDING WITH THE INSTALLATION OF THEIR WORK.

D. CONTRACTOR SHALL FURNISH OTHER TRADES ADVANCE INFORMATION AND/OR SHOP DRAWINGS ON LOCATIONS AND SIZES OF PIPING, DUCTWORK, EQUIPMENT, SLEEVES AND OPENINGS, ETC. NEEDED FOR THEIR WORK TO PERMIT OTHER TRADES AFFECTED TO INSTALL THEIR WORK PROPERLY AND WITHOUT DELAY.

E. WHERE THERE IS EVIDENCE THAT WORK OF ONE TRADE WILL INTERFERE WITH WORK OF OTHER TRADES, ALL TRADES SHALL MEET ON JOB SITE TO WORK OUT SPACE CONDITIONS AND MAKE SATISFACTORY ADJUSTMENTS TO INSTALLATION OF THE NEW WORK. CONTRACTOR SHALL BE RESPONSIBLE, AT THEIR OWN EXPENSE, FOR THE REMOVAL AND REINSTALLATION OF ANY PART OF THEIR WORK IF SAME WAS INSTALLED WITHOUT CONSULTING WITH OTHER TRADES BEFORE INSTALLING THEIR WORK.

F. CONTRACTOR SHALL PROVIDE SLEEVES IN FLOORS AND WALLS AS SHOWN ON THE DRAWINGS, AS REQUIRED BY JOB SITE CONDITIONS, AND/OR AS SPECIFIED, WHEN INSTALLING THEIR WORK.

G. THE SEQUENCE FOR THE INSTALLATION OF ALL WORK SHALL BE COORDINATED BETWEEN ALL CONTRACTORS ON THE PROJECT AND IN STRICT ACCORDANCE WITH ENGINEER AND OWNERS STIPULATION AS CALLED FOR IN THE SPECIFICATION AND/OR AS DIRECTED.

H. CONTRACTOR SHALL REFER TO THE ARCHITECTURAL AND STRUCTURAL CONTRACT DRAWINGS (BEFORE SUBMITTING THEIR BIDS) TO FAMILIARIZE THEMSELVES WITH THE EXTENT OF THE OTHER TRADES CONTRACTORS WORK, CEILING HEIGHTS AND CLEARANCE FOR INSTALLING THEIR WORK.

I. CONTRACTOR SHALL BE RESPONSIBLE AND PAY FOR ALL CORING, CUTTING, PATCHING, REPAIRING AND REFINISHING OF BUILDING CONSTRUCTION REQUIRED TO ACCOMMODATE THE INSTALLATION OF THEIR WORK. (NOTE: FLOOR CUTTING AND PATCHING FOR NEW DUCTWORK AND ALL ROOF CUTTING AND PATCHING TO BE BY GENERAL CONTRACTOR.) ALL PATCHING, REPAIRING AND REFINISHING WORK SHALL BE PERFORMED BY THOSE REGULARLY INVOLVED IN THAT TRADE AND SHALL MATCH THE NEW CONSTRUCTION AS CLOSELY AS POSSIBLE. CARE SHALL BE TAKEN SO AS NOT TO DAMAGE ANY EXISTING BUILDING CONSTRUCTION OR ITEMS THAT ARE TO REMAIN. ANY EXISTING FINISHES THAT ARE DAMAGED DURING THE INSTALLATION OF NEW WORK SHALL BE REPAIRED, REPLACED AND PAID FOR BY THE INSTALLING CONTRACTOR, TO THE SATISFACTION OF THE ARCHITECT AND OWNER. REFER TO ARCHITECTURAL DRAWINGS FOR EXISTING BUILDING CONSTRUCTION THAT IS TO REMAIN AND, THEREFORE, SUBJECT TO PATCHING, REPAIRING, AND REFINISHING.

J. CONTRACTOR SHALL BE RESPONSIBLE FOR THEIR OWN CLEAN-UP DURING CONSTRUCTION.

K. CONTRACTOR SHALL INSTALL ALL AUXILIARY SUPPORTING STEEL AS REQUIRED FOR THE SUPPORTING OF THEIR DUCTWORK, AND CONDUIT. ALL SUPPORTING STEEL FOR ITEMS ABOVE A SUSPENDED CEILING SHALL BE FROM BUILDING STRUCTURAL MEMBERS ONLY.

L. ALL PIPING SHALL BE SUSPENDED WITH CLEVIS AND/OR TRAPEZE PIPE HANGERS. INSULATED PIPING SHALL REST ON STEEL PIPE COVERING PROTECTION SADDLES OR SHEET METAL INSULATION SHIELDS AS CALLED FOR IN THE SPECIFICATIONS AND/OR DETAILED ON THE DRAWINGS.

M. INSTALL A MANUAL SHUT OFF COCK AND DIRT LEG ON EACH BRANCH GAS LINE CONNECTED TO GAS FIRED EQUIPMENT. ALL VENT LINES FROM EACH GAS REGULATOR SHALL BE GROUPED INTO A COMMON HEADER AND RUN UP THRU ROOF TO A TURNED DOWN ELBOW WITH GALVANIZED INSECT SCREEN OVER OPENING.

N. ALL DUCTWORK SIZES SHOWN ON THE DRAWINGS ARE INSIDE DIMENSIONS. WHERE DUCT LINING IS CALLED FOR CONTRACTOR SHALL INCREASE THE SIZE OF THE DUCT TO MAINTAIN THE MINIMUM INSIDE DIMENSIONS CALLED FOR ON THE DRAWINGS.

O. ALL DUCTWORK CONNECTIONS TO AIR MOVING EQUIPMENT SHALL BE MADE WITH FLEXIBLE DUCT CONNECTIONS ON THE INLET AND DISCHARGE OF ALL SUPPLY, RETURN AND EXHAUST FANS.

P. ALL BUILT UP UNITS SHALL HAVE INTERNAL SPRING VIBRATION ISOLATORS. ALL SUSPENDED EXHAUST FANS SHALL BE HUNG WITH OR SET ON SPRING VIBRATION ISOLATORS.

Q. INSTALL TURNING VANES IN ALL SQUARE DUCT ELBOWS. INSTALL MANUAL VOLUME DAMPERS IN EACH BRANCH DUCT AT CONNECTION TO MAIN DUCT AND IN EACH DUCT AFTER A BRANCH DUCT SPLIT.

R. THE LOCATIONS SHOWN FOR ALL DIFFUSERS, REGISTERS AND GRILLES, ETC. ARE DIAGRAMMATIC. EXACT LOCATION SHALL BE DETERMINED FROM THE REFLECTED CEILING PLANS AND/OR ON THE JOB SITE BY THE ARCHITECT/ENGINEER REPRESENTATIVES.

S. UNLESS INDICATED OTHERWISE, THE ARCHITECT/ENGINEER MAKES NO REPRESENTATION AS TO WHETHER OR NOT ANY HAZARDOUS OR CONTAMINATED MATERIALS (INCLUDING BUT NOT LIMITED TO ASBESTOS, PCB'S, CONTAMINATED SOILS, ETC.) ARE PRESENT WITHIN THE EXISTING BUILDING OR ON THE SITE. WORK SHOWN ON THE DRAWINGS AND/OR INDICATED IN THE SPECIFICATIONS SHALL NOT BE CONSTRUED TO CALL FOR CONTACT WITH ANY OF THESE MATERIALS. IF THESE MATERIALS ARE ENCOUNTERED OR SUSPECTED, THE CONTRACTOR SHALL NOT DISTURB THEM AND SHALL CONTACT THE ENGINEER IMMEDIATELY.

T. CONTRACTOR SHALL STORE ALL MATERIALS AND EQUIPMENT SHIPPED TO THE SITE IN A PROTECTED AREA. IF MATERIAL IS STORED OUTSIDE OF THE BUILDING, IT MUST BE STORED OFF THE GROUND A MINIMUM OF SIX INCHES (6") SET ON 6 X 6 PLANKS AND/ OR WOOD PALLETS. ALL MATERIAL AND EQUIPMENT MUST BE COMPLETELY COVERED WITH WATERPROOF TARPS OR VISQUIN. ALL PIPING AND DUCTWORK WILL HAVE THE ENDS CLOSED TO KEEP OUT DIRT AND OTHER DEBRIS. NO EQUIPMENT WILL BE ALLOWED TO BE STORED ON THE SITE UNLESS IT IS SITTING ON WOOD PLANKS AND COMPLETELY PROTECTED WITH WEATHERPROOF COVERS.

U. MECHANICAL CONTRACTOR SHALL PROVIDE ON SITE SCHOOLING OF OWNERS OPERATING PERSONNEL FOR ALL SYSTEMS AND EQUIPMENT INSTALLED UNDER HIS CONTRACT.

V. BEFORE STARTING ANY SYSTEM INSTALLING CONTRACTOR SHALL CONTACT EQUIPMENT MANUFACTURER TO VERIFY THAT EACH PIECE OF EQUIPMENT OR SYSTEM HAS BEEN CHECKED FOR PROPER LUBRICATION, DRIVE ROTATION, BELT TENSION, CONTROL SEQUENCE OR OTHER CONDITIONS WHICH MAY CAUSE DAMAGE TO THE EQUIPMENT OR SYSTEM.

W. THE MECHANICAL CONTRACTOR TO PROVIDE 1/4 INCH SCALE DUCTWORK DRAWINGS FOR COORDINATION WITH OTHER TRADES. DRAWINGS TO INDICATE DIMENSIONS AND ELEVATIONS OF ALL PIPING AND DUCTWORK. DRAWINGS TO ALSO INCLUDE ALL WALL/FLOOR/ROOF OPENINGS.

X. MECHANICAL CONTRACTOR TO PROVIDE SCHEDULE OF CURB INSTALLATION/REMOVAL ON EXISTING ROOF AREAS TO CONTRACTOR FIVE (5) WORKING DAYS IN ADVANCE. ANY REVISIONS TO THIS SCHEDULE RESULTING IN UNPATCHED ROOF TIE-INS AND DAMAGE TO EXISTING CONDITIONS SHALL BE REPAIRED BY MECHANICAL CONTRACTOR AT NO ADDITIONAL COST TO THE OWNER.

Y. INSTALL A SHEET METAL SLEEVE AROUND ANY DUCTWORK WHICH GOES THROUGH WALL CONSTRUCTION, PACK FIBERGLAS INSULATION AROUND SLEEVE AND DUCT AND CAULK WITH FIRE SEAL CAULKING.

Z. WHEN INSTALLING EXPANSION JOINTS, CONTRACTOR SHALL INSTALL A PIPE ANCHOR AT EACH END OF RUN AND PIPE GUIDES A MINIMUM OF EVERY TWENTY-FIVE (25) FEET OR AS CALLED FOR ON THE DRAWINGS. MOUNT THE FIRST PIPE GUIDE LOCATED ON EACH SIDE OF THE EXPANSION JOINT A MINIMUM OF FOUR (4) PIPE DIAMETERS FROM THE EXPANSION JOINT.

AA. THE DRAWINGS, SCHEDULES AND SPECIFICATIONS HAVE BEEN PREPARED USING ONE MANUFACTURER FOR EACH PIECE OF EQUIPMENT AS THE BASIS FOR DIMENSIONAL DESIGN. IF THE CONTRACTOR PURCHASES EQUIPMENT LISTED AS A SPECIFIED ACCEPTABLE MANUFACTURER BUT IS NOT THE SCHEDULED MANUFACTURER USED FOR THE BASE DESIGN, THE CONTRACTOR SHALL BE RESPONSIBLE FOR CHECKING ALL THE DIMENSIONS OF THE EQUIPMENT TO VERIFY THAT IT WILL FIT IN THE SPACE SHOWN ON THE DRAWINGS. MINOR DEVIATIONS IN DIMENSIONS WILL BE PERMITTED, PROVIDED THE RATINGS MEET THOSE SHOWN ON THE DRAWINGS AND EQUIPMENT WILL PHYSICALLY FIT INTO THE SPACE ALLOCATED WITH SUITABLE ACCESS AROUND EQUIPMENT FOR OPERATION AND MAINTENANCE ON THE EQUIPMENT.

BB. CONTRACTOR AND/OR MANUFACTURER SHALL VERIFY THAT THE CHARACTERISTICS OF THE EQUIPMENT HE SUBMITS FOR REVIEW MEETS THE CAPACITY AND DUTY SPECIFIED.

CC. WHEN EQUIPMENT IS SUBMITTED FOR REVIEW AND DOES NOT MEET THE PHYSICAL SIZE OR ARRANGEMENT OF THAT SCHEDULED AND SPECIFIED, CONTRACTOR SHALL PAY FOR ALL ALTERATIONS REQUIRED TO ACCOMMODATE SUCH EQUIPMENT AT NO ADDITIONAL COST TO OWNER. CONTRACTOR WILL ALSO PAY ALL COSTS FOR ADDITIONAL WORK REQUIRED BY OTHER CONTRACTORS, OWNER, ARCHITECT OR ENGINEER TO MAKE CHANGES WHICH WOULD ALLOW THE EQUIPMENT TO FIT IN THE SPACE AND FUNCTION AS INTENDED.

DD. ALL TEMPERATURE AND PRESSURE SENSORS SHALL BE INSTALLED IN LOCATIONS SUCH THAT THEY DO NOT MAKE FALSE READINGS. BAS CONTRACTOR/ENGINEER SHALL REVIEW THE PLANS AND IDENTIFY ANY SUCH POTENTIAL CAUSES FOR FALSE READINGS AND NOTIFY THE ENGINEER IN WRITING THAT THESE SHOULD BE RELOCATED PRIOR TO ROUGH IN AND CONTROLS INSTALLATION. THE BAS CONTROLS CONTRACTOR SHALL RELOCATE ANY SENSORS INSTALLED IN IMPROPER LOCATIONS AND GIVING FALSE READINGS AT HIS OWN EXPENSE. CONDITIONS TO BE AWARE OF SHALL INCLUDE BUT ARE NOT LIMITED TO LOCATIONS OF THERMOSTATS BEHIND DOORS, OUTDOOR AIR SENSORS NEAR EXHAUST OPENINGS, STATIC PRESSURE SENSORS IN TURBULENT LOCATIONS, THERMOSTATS INSTALLED ADJACENT TO HEAT SOURCES SUCH AS COFFEE POTS, COMPUTERS, VENDING MACHINES AND OTHER APPLIANCES, ETC.

Larson & Darby Group
Architects Engineers Planners
Rockford Office - 4949 Harrison Ave., Suite 100, P.O.Box 5207 Rockford, IL 61125 Tel (815) 484-0799 Fax (815) 229-9657

CITY OF ROCKFORD
120 N 3RD STREET
ROCKFORD, ILLINOIS

COPYRIGHT 2014
All drawn and written information appearing herein shall not be duplicated, disclosed, or otherwise used without the written consent of Larson & Darby Group

ISSUED FOR:	DATE
ISSUED FOR CONSTRUCTION	06-20-14

DRAWN: CRF
APPROVED: KBO

DATE: 06-26-2014
PROJECT NUMBER: 24043
SHEET NUMBER: M3.0

PLOTTED BY: RUBEN DELAFUENTE DATE PLOTTED: 6/30/2014 10:25 AM FILE PATH AND NAME: P:\037-A-2 Rockford Wellness Center Mech-Elec Design\M\037a2-M30

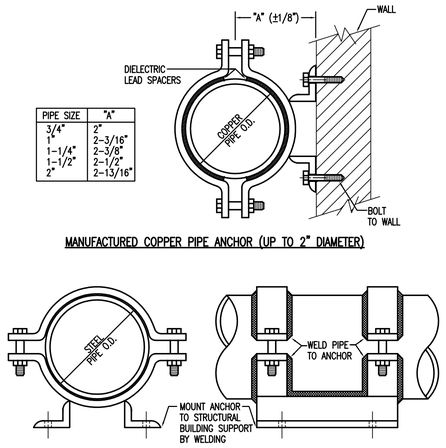

PIPE SIZE	"A"
3/4"	2"
1"	2-3/16"
1-1/4"	2-3/8"
1-1/2"	2-1/2"
2"	2-13/16"

MANUFACTURED COPPER PIPE ANCHOR (UP TO 2" DIAMETER)

MANUFACTURED STEEL PIPE ANCHOR (2-1/2" DIAMETER AND UP)

1 / M4.0 MANUFACTURED PIPE ANCHOR DETAIL

NO SCALE

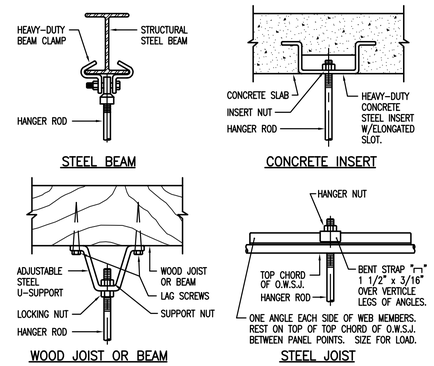

PIPE HANGERS AND SUPPORTS
SUPPORT HORIZONTAL STEEL AND COPPER PIPING AS FOLLOWS:

NOMINAL PIPE SIZE	DISTANCE BETWEEN SUPPORTS	HANGER ROD DIAMETERS
1/2"	6'	3/8"
3/4 TO 1-1/2"	6'	1/2"
2" TO 2-1/2"	10'	1/2"
3" AND 4"	10'	5/8"

PLACE HANGER WITHIN 1 FOOT OF EACH HORIZ. ELBOW. SUPPORT HORIZ. SOIL WASTE AND STORM PIPE NEAR EACH HUB, WITH 5 FEET MAXIMUM SPACING BETWEEN HANGERS.

VERTICAL PIPING:
1. SUPPORT VERTICAL WATER PIPING AT EVERY FLOOR.
2. SUPPORT VERTICAL SOIL PIPE AT EACH FLOOR AT HUB.

WHERE SEVERAL PIPES CAN BE INSTALLED IN PARALLEL AND AT SAME ELEVATION PROVIDE MULTIPLE OR TRAPEZE HANGERS.
WHERE PRACTICAL, SUPPORT RISER PIPING INDEPENDENTLY OF CONNECTED HORIZ. PIPING.

2 / M4.0 PIPE HANGER DETAILS

NO SCALE

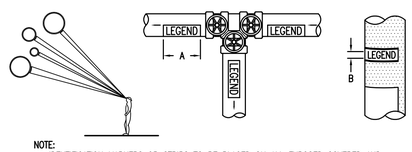

NOTE:
IDENTIFICATION MARKERS OR STRIPS TO BE PLACED ON ALL EXPOSED COVERED AND UNCOVERED PIPES AT 50'-0" INTERVALS AND AT ALL VALVES AND BRANCHES AND ON BOTH SIDES OF WALLS WHERE PIPES PASS THROUGH SAME. ARROWS OF SAME COLOR AS IDENTIFICATION MARKERS SHALL ALSO BE PLACED ON PIPES POINTING AWAY FROM MARKER INDICATING DIRECTION OF FLOW.

SIZE OF LEGEND LETTERS

OUTSIDE DIAMETER OF PIPE OR COVERING	LENGTH OF COLOR FIELD A	SIZE OF LETTERS B
3/4" TO 1-1/4"	8"	1/2"
1-1/2" TO 2"	8"	3/4"
2"-1/2" TO 6"	12"	1-1/4"

SERVICE	BACKGROUND OR COLOR BAND	IDENTIFICATION MARKER
CITY WATER	GREEN	WHITE ON GREEN
DOMESTIC COLD WATER	GREEN	WHITE ON GREEN
DOMESTIC HOT WATER	YELLOW	BLACK ON YELLOW
FIRE PROTECTION (SPRINKLER)	RED	WHITE ON RED
NATURAL GAS	YELLOW	BLACK ON YELLOW
SANITARY DRAIN	GREEN	WHITE ON GREEN
STORM WATER	GREEN	WHITE ON GREEN

3 / M4.0 PIPE IDENTIFICATION MARKER DETAIL

NO SCALE

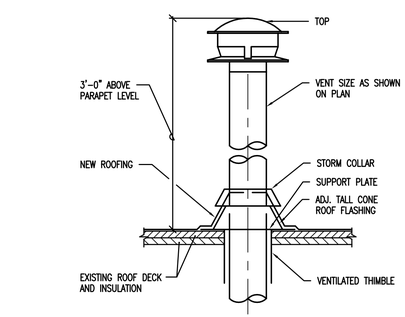

4 / M4.0 FLUE VENT THRU ROOF DETAIL

NO SCALE

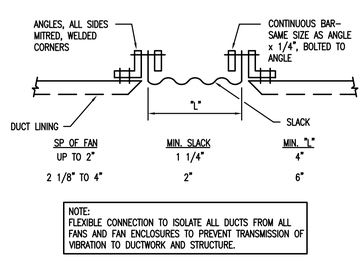

SP OF FAN	MIN. SLACK	MIN. "L"
UP TO 2"	1 1/4"	4"
2 1/8" TO 4"	2"	6"

NOTE:
FLEXIBLE CONNECTION TO ISOLATE ALL DUCTS FROM ALL FANS AND FAN ENCLOSURES TO PREVENT TRANSMISSION OF VIBRATION TO DUCTWORK AND STRUCTURE.

5 / M4.0 FLEXIBLE CONNECTION (FC)

NO SCALE

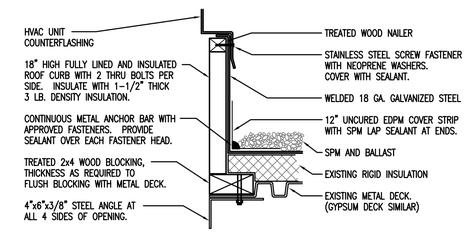

NOTE:
THIS DETAIL TYPICAL FOR ALL EQUIPMENT SUPPORT.

6 / M4.0 EQUIPMENT ROOF CURB DETAIL

NO SCALE

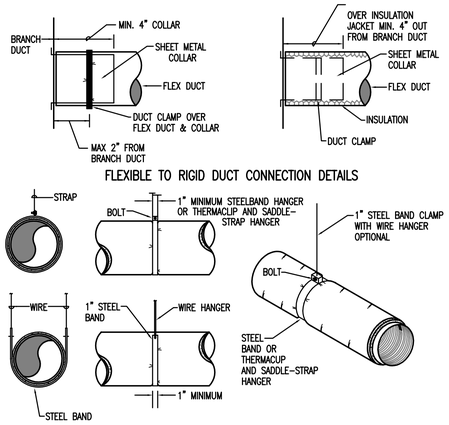

NOTE:
MAXIMUM PERMISSIBLE SAG PER FOOT=1/2" BETWEEN SUPPORTS.

7 / M4.0 FLEXIBLE DUCT HANGER AND CONNECTION DETAILS

NO SCALE

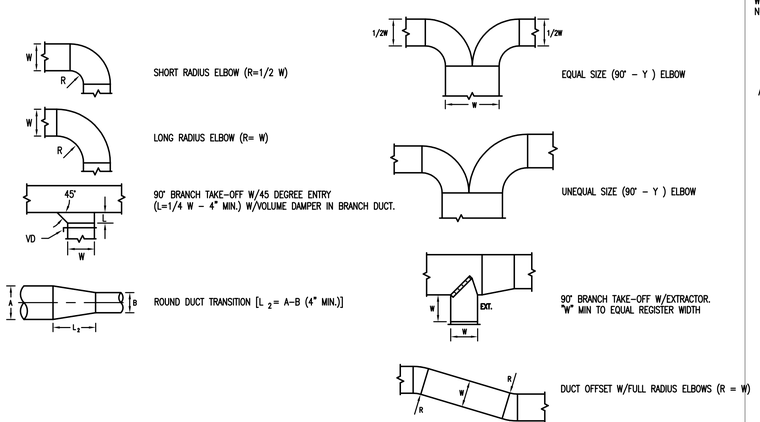

8 / M4.0 TYPICAL DUCTWORK CONNECTIONS

NO SCALE

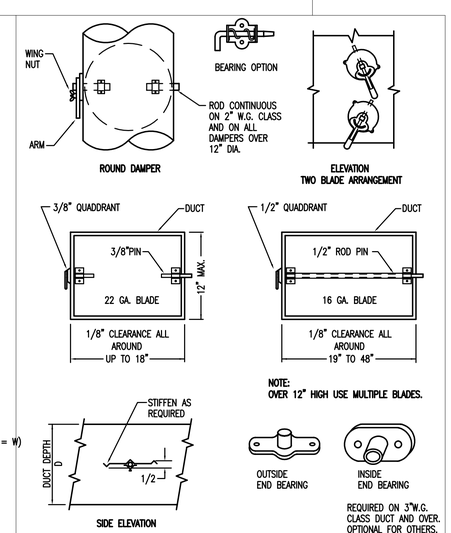

9 / M4.0 VOLUME DAMPERS - SINGLE BLADE TYPE

NO SCALE

OAS,LLC
O'HIGGINS AND ARNOLD SUSTAINABILITY, LLC
769 HEARTLAND DR., UNIT A SUGAR GROVE, ILLINOIS 60554

Larson & Darby Group
Architects Engineers Planners
Rockford Office - 4949 Harrison Ave., Suite 100, P.O.Box 5207 Rockford, IL 61125 Tel (815) 484-0799 Fax (815) 229-9657

CITY OF ROCKFORD
120 N 3RD STREET
ROCKFORD, ILLINOIS

COPYRIGHT 2014
All drawn and written information appearing herein shall not be duplicated, disclosed, or otherwise used without the written consent of Larson & Darby Group

ISSUED FOR:	DATE
ISSUED FOR CONSTRUCTION	06-26-14

DRAWN: CRF
APPROVED: KBO

DATE: 06-26-2014
PROJECT NUMBER: 24043
SHEET NUMBER: M4.0

PLOTTED BY: RUBEN DELAFUENTE DATE PLOTTED: 6/30/2014 10:26 AM FILE PATH AND NAME: P:\037-A-2 Rockford Wellness Center Mech-Elec Design\M\037a2-M40

OAS,LLC
O'HIGGINS AND ARNOLD SUSTAINABILITY, LLC
789 HEARTLAND DR., UNIT A SUGAR GROVE, ILLINOIS 60554

MECHANICAL SPECIFICATIONS

BASIC MECHANICAL REQUIREMENTS

1. GENERAL

1.01. SUBMITTALS
- A. SUBMIT FOUR COPIES OF MANUFACTURER'S LITERATURE ON ALL PURCHASED AND FABRICATED COMPONENTS. SUBMITTAL SHALL INCLUDE MANUFACTURER'S SPECIFICATIONS, CAPACITIES, OPTIONS, O+M AND INSTALLATION INSTRUCTIONS, WIRING DIAGRAMS ETC.
- B. SUBMIT SHOP DRAWINGS AND PRODUCT DATA GROUPED TO INCLUDE COMPLETE SUBMITTALS OF RELATED SYSTEMS, PRODUCTS AND ACCESSORIES IN A SINGLE SUBMITTALS.
- C. MARK DIMENSIONS AND VALUES IN UNITS TO MATCH THOSE SPECIFIED.
- D. SUBCONTRACTOR SHALL REVIEW ALL SHOP DRAWINGS PRIOR TO SUBMITTING THEM FOR OWNER REVIEW. SUBCONTRACTOR SHALL STAMP EACH SHOP DRAWING TO CERTIFY THAT HE HAS REVIEWED IT FOR QUANTITIES AND COORDINATION WITH FIELD CONDITIONS AND OTHER TRADES. ENGINEER WILL NOT REVIEW ANY SHOP DRAWINGS THAT SUBCONTRACTOR HAS NOT STAMPED WITH HIS REVIEW CERTIFICATION.
- E. UPON COMPLETION OF THE PROJECT SUBMIT SIX COPIES OF OWNER'S OPERATING AND MAINTENANCE MANUALS IN RING BIDDERS WITH TYPE WRITTEN OPERATING INSTRUCTIONS AND MAINTENANCE PROCEDURES (AND INTERVALS)FOR ALL SYSTEMS AND EQUIPMENT. INCLUDE COMPLETE MANUFACTURER'S DATA AS REQUIRED ABOVE WITH PARTS LISTS AND TELEPHONE NUMBERS OF LOCAL PARTS AND SERVICE REPRESENTATIVES.

1.02. REGULATORY REQUIREMENTS
- A. CONFORM TO CITY OF CHICAGO BUILDING CODE
- B. CONFORM TO CITY OF CHICAGO MECHANICAL CODE
- C. CONFORM TO UNDERWRITERS' LABORATORIES.
- D. CONFORM TO NATIONAL ELECTRICAL CODE.
- E. CONFORM TO STATE OF ILLINOIS CODE, REGULATIONS AND REQUIREMENTS.

1.03. PROJECT/SITE CONDITIONS
- A. INSTALL WORK IN LOCATIONS SHOWN ON DRAWINGS, UNLESS PREVENTED BY PROJECT CONDITIONS.
- B. PREPARE DRAWINGS SHOWING PROPOSED REARRANGEMENT OF WORK TO MEET PROJECT CONDITIONS, INCLUDING CHANGES TO WORK SPECIFIED IN OTHER SECTIONS. OBTAIN PERMISSION OF OWNER BEFORE PROCEEDING.

1.04. SUBCONTRACTOR'S RESPONSIBILITY TO VERIFY EQUIPMENT DIMENSIONS AND/OR CAPACITIES
- A. THE DRAWINGS, SCHEDULES AND SPECIFICATIONS HAVE BEEN PREPARED USING ONE MANUFACTURER FOR EACH PIECE OF EQUIPMENT AS THE BASIS FOR DIMENSIONAL DESIGN. IF THE SUBCONTRACTOR PURCHASES EQUIPMENT LISTED AS A SPECIFIED ACCEPTABLE MANUFACTURER BUT IS NOT THE SCHEDULED MANUFACTURER USED FOR THE BASE DESIGN, THE SUBCONTRACTOR SHALL BE RESPONSIBLE FOR CHECKING ALL THE DIMENSIONS OF THE EQUIPMENT TO VERIFY THAT IT WILL FIT IN THE SPACE SHOWN ON THE DRAWINGS. MINOR DEVIATIONS IN DIMENSIONS WILL BE PERMITTED, PROVIDED THE ALL RATINGS MEET WHAT WAS SHOWN ON THE DRAWINGS AND EQUIPMENT WILL PHYSICALLY FIT INTO THE SPACE ALLOCATED WITH SUITABLE ACCESS AROUND EQUIPMENT FOR OPERATION AND MAINTENANCE ON THE EQUIPMENT.
- B. SUBCONTRACTOR AND/OR MANUFACTURER SHALL VERIFY THAT THE CAPACITY AND DUTY SPECIFIED MEETS THE CHARACTERISTICS OF THE EQUIPMENT HE SUBMITS FOR REVIEW.
- C. IF EQUIPMENT IS SUBMITTED FOR REVIEW AND DOES NOT MEET THE PHYSICAL SIZE OR ARRANGEMENT OF WHAT WAS SCHEDULED AND SPECIFIED, SUBCONTRACTOR SHALL PAY FOR ALL ALTERNATIONS REQUIRED TO ACCOMMODATE SUCH EQUIPMENT AT NO ADDITIONAL COST TO THE OWNER. SUBCONTRACTOR SHALL ALSO PAY ALL COSTS FOR ADDITIONAL WORK REQUIRED BY OTHER SUBCONTRACTORS, OWNER, ARCHITECT OR ENGINEER TO MAKE CHANGES WHICH WOULD ALLOW THE EQUIPMENT TO FIT THE SPACE.

1.05 DRAWINGS AND DIMENSIONS
- A. SUBCONTRACTOR SHALL REFER TO THE ARCHITECTURAL DRAWINGS FOR ALL COORDINATION WITH ARCHITECTURAL ELEMENTS AND DIMENSIONS. THESE DRAWINGS ARE TO SHOW THE SCOPE OF MECHANICAL WORK ONLY. REFER TO ARCHITECTURAL DRAWINGS FOR EXACT LOCATIONS OF WALL, ROOMS, CEILINGS, ETC.
- B. SUBCONTRACTOR SHALL THOROUGHLY REVIEW THE ARCHITECTURAL, STRUCTURAL AND DRAWINGS FOR ALL OTHER TRADES PRIOR TO SUBMITTING HIS BID TO ASSURE THAT ALL COORDINATION IS INCLUDED IN HIS PRICE.
- C. SUBCONTRACTOR SHALL CHANGE DIMENSIONS TO EQUIVALENT SIZES AND ADD FITTINGS AND COMPONENTS AS REQUIRED TO FIT AND COORDINATE HIS WORK FOR A COMPLETE AND FULLY OPERATION SYSTEM WHETHER COMPONENTS ARE INDICATED ON THE PLANS OR NOT.
- D. DO NOT SCALE OR FABRICATE FROM THESE PLANS.

1.06 SCOPE OF WORK
- A. ALL WORK SHOWN ON THESE PLANS IS DIAGRAMMATIC TO INDICATE THE GENERAL INTENT OF THE MECHANICAL DESIGN AND CAPACITIES AND SIZES OF MAJOR COMPONENTS. SUBCONTRACTOR IS RESPONSIBLE FOR UNDERSTANDING THE DESIGN INTENT AND CLARIFYING ANY QUESTIONS AND/OR INCONSISTENCIES PRIOR TO SUBMITTING HIS BID.
- B. SUBMISSION OF BID INDICATED THE SUBCONTRACTOR'S ASSURANCE OF COMPLETE UNDERSTANDING OF THE DESIGN INTENT AND THAT ALL NECESSARY COMPONENTS FOR A COMPLETE AND FULLY OPERATIONS SYSTEM, WHETHER SPECIFICALLY INDICATE ON THE PLANS OR NOT, ARE INCLUDED IN HIS PRICE.

1.07 WARRANTY
- A. THE SUBCONTRACTOR SHALL PROVIDE A WRITTEN WARRANTY UPON COMPLETION FOR ONE FULL YEAR PARTS AND LABOR TO SERVICE, ADJUST AND REPAIR ALL SYSTEM COMPONENTS IF THEY FAIL TO PERFORM PROPERLY AND REPLACE ANY DEFECTIVE EQUIPMENT OR SYSTEM COMPONENTS AT NO CHARGE TO THE OWNER.
- B. WARRANTY PERIOD SHALL BEGIN UPON THE DATE OF START-UP AND FINAL PAYMENT.

MECHANICAL INSULATION

1. GENERAL
- 1.01. WORK INCLUDED
  - A. DUCTWORK INSULATION.
  - B. DUCT LINER.
  - C. INSULATION JACKETS.
  - D. PIPE INSULATION
  - E. EQUIPMENT INSULATION
- 1.02. RELATED WORK
  - A. DUCTWORK.
  - B. HYDRONIC PIPING
- 1.03. QUALITY ASSURANCE
  - A. MATERIALS: FLAME SPREAD/SMOKE DEVELOPED RATING OF 25/50 IN ACCORDANCE WITH ASTM E84.

2. PRODUCTS
- 2.01 ACCEPTABLE MANUFACTURERS:
  1. OWENS CORNING CORP.
  2. CERTAINTEED CORP.
  3. KNAUF FIBERGLASS.
  4. MANVILLE.
  5. APPROVED EQUAL.
- 2.02. GLASS FIBER, FLEXIBLE DUCT WRAP (TYPE A)
  - A. INSULATION: ASTM C553; FLEXIBLE, NONCOMBUSTIBLE BLANKET.
    1. R VALUE: ASTM C518, 5.7 AT 75 DEGREES F.
    2. MAXIMUM SERVICE TEMPERATURE: 250 DEGREES F.
    3. MAXIMUM MOISTURE ABSORPTION: 0.20 PERCENT BY VOLUME.
    4. DENSITY: 1.0 LB/CU.FT.
    5. THICKNESS: 1-1/2 INCH.
  - B. VAPOR BARRIER JACKET:
    1. KRAFT PAPER REINFORCED WITH GLASS FIBER YARN AND BONDED TO ALUMINIZED FILM.
    2. MOISTURE VAPOR TRANSMISSION: ASTM E96; 0.04 PERM.
    3. SECURE WITH PRESSURE SENSITIVE TAPE.
  - C. VAPOR BARRIER TAPE:
    1. KRAFT PAPER REINFORCED WITH GLASS FIBER YARN AND BONDED TO ALUMINIZED FILM, WITH PRESSURE SENSITIVE RUBBER BASED ADHESIVE.
- 2.03. GLASS FIBER, RIGID DUCT WRAP (TYPE B)
  - A. INSULATION: ASTM C612; RIGID, NONCOMBUSTIBLE BOARD WITH ASJ FACING AND ASJ TAPE.
    1. K VALUE: ASTM C518, 0.23 AT 75 DEGREES F.
    2. MAXIMUM SERVICE TEMPERATURE: 250 DEGREES F.
    3. MAXIMUM MOISTURE ABSORPTION: 0.20 PERCENT BY VOLUME.
    4. DENSITY: 3.0 LB/CU.FT.
    5. THICKNESS: 2 INCH.
  - B. VAPOR BARRIER JACKET:
    1. KRAFT PAPER REINFORCED WITH GLASS FIBER YARN AND BONDED TO ALUMINIZED FILM.
    2. MOISTURE VAPOR TRANSMISSION: ASTM E96; 0.04 PERM.
    3. SECURE WITH PRESSURE SENSITIVE TAPE.
  - C. VAPOR BARRIER TAPE:
    1. KRAFT PAPER REINFORCED WITH GLASS FIBER YARN AND BONDED TO ALUMINIZED FILM, WITH PRESSURE SENSITIVE RUBBER BASED ADHESIVE.
- 2.04. GLASS FIBER DUCT LINER, FLEXIBLE (TYPE C)
  - A. INSULATION: ASTM C553; FLEXIBLE, NONCOMBUSTIBLE BLANKET.
    1. K VALUE: ASTM C518, 0.27 AT 75 DEGREES F.
    2. MAXIMUM SERVICE TEMPERATURE: 250 DEGREES F.
    3. DENSITY: 2.0 LB/CU.FT.
    4. NEOPRENE COATING ON AIR SIDE.
    5. MAXIMUM VELOCITY ON COATED AIR SIDE: 4,000 FT/MIN.
  - B. ADHESIVE:
    1. WATERPROOF FIRE-RETARDANT TYPE.
  - C. MECHANICAL FASTENERS: GALVANIZED STEEL, SELF-ADHESIVE PAD OR IMPACT APPLIED WITH PRESS ON HEAD. INSTALL IN ACCORDANCE WITH THE REQUIREMENTS OF SMACNA STANDARDS. COMPRESSION OF LINEAR SURFACE NOT TO EXCEED 10% OF THICKNESS.
  - D. LINER SHALL BE ATTACHED TO SHEET METAL USING ADHESIVE COVERING 90% OF THE METAL SURFACE.
  - E. COAT EDGE OF UPSTREAM END OF LINER WITH ADHESIVE.

3. EXECUTION
- 3.01. EXAMINATION
  - A. VERIFY THAT DUCTWORK AND PIPING HAS BEEN TESTED BEFORE APPLYING INSULATION MATERIALS.
  - B. VERIFY THAT SURFACES ARE CLEAN, FOREIGN MATERIAL REMOVED AND DRY.
- 3.02. INSTALLATION
  - A. INSTALL MATERIALS IN ACCORDANCE WITH MANUFACTURER'S INSTRUCTIONS.
  - B. INSULATED DUCT AND PIPE CONVEYING FLUID BELOW AMBIENT TEMPERATURE:
    1. PROVIDE INSULATION WITH VAPOR BARRIER JACKETS.
    2. FINISH WITH TAPE AND VAPOR BARRIER JACKET.
    3. CONTINUE INSULATION THROUGH WALLS, SLEEVES, HANGERS AND OTHER DUCT PENETRATIONS.
    4. INSULATE ENTIRE SYSTEM INCLUDING FITTINGS, JOINTS, FLANGES, FIRE DAMPERS, FLEXIBLE CONNECTIONS AND EXPANSION JOINTS.
  - C. INSULATED DUCTWORK CONVEYING AIR ABOVE AMBIENT TEMPERATURE:
    1. PROVIDE WITH STANDARD VAPOR BARRIER JACKET.
    2. INSULATE FITTINGS AND JOINTS. WHERE SERVICE ACCESS IS REQUIRED, BEVEL AND SEAL ENDS OF INSULATION.
  - D. EXTERNAL DUCT INSULATION APPLICATION:
    1. SECURE INSULATION WITH VAPOR BARRIER WITH WIRES AND SEAL JACKET JOINTS WITH VAPOR BARRIER ADHESIVE OR TAPE TO MATCH JACKET; VAPOR TIGHT.
    2. INSTALL WITHOUT SAG ON UNDERSIDE OF DUCTWORK. USE ADHESIVE AND MECHANICAL FASTENERS WHERE NECESSARY TO PREVENT SAGGING. LIFT DUCTWORK OFF TRAPEZE HANGERS AND INSERT SPACERS.
    3. SEAL VAPOR BARRIER PENETRATIONS BY MECHANICAL FAST-ENERS WITH VAPOR BARRIER ADHESIVE.
    4. STOP AND POINT INSULATION AROUND ACCESS DOORS AND DAMPER OPERATORS TO ALLOW OPERATION WITHOUT DISTURBING WRAPPING.
  - E. DUCT LINER APPLICATIONS:
    1. ADHERE INSULATION WITH ADHESIVE FOR 90 PERCENT COVERAGE.
    2. SECURE INSULATION WITH MECHANICAL LINER FASTENERS. REFER TO SMACNA STANDARDS FOR SPACING.
    3. SEAL AND SMOOTH JOINTS.
    4. SEAL LINER SURFACE PENETRATIONS WITH ADHESIVE.
    5. DUCT DIMENSIONS INDICATED ARE NET INSIDE DIMENSIONS REQUIRED FOR AIR FLOW. INCREASE DUCT SIZE TO ALLOW FOR INSULATION THICKNESS.
  - F. ALL INSULATION SHALL BE INSTALLED NEATLY IN A WORKMAN LIKE MANNER IN STRICT ACCORDANCE WITH MANUFACTURER'S INSTRUCTIONS.
- 3.04. GLASS FIBER DUCTWORK INSULATION SCHEDULE

TYPE DUCTWORK	THICKNESS INCHES	TYPE
LOW VELOCITY SUPPLY DUCTWORK	1/2"	C
ALL LOW AND MEDIUM VELOCITY SUPPLY AND RETURN DUCTWORK FOR THE FIRST 20'-0" OF DUCTWORK UPSTREAM AND DOWNSTREAM OF FANS	1"	C
RELIEF AND TRANSFER DUCTS	1/2"	C
OUTDOOR AIR INTAKE PLENUMS AND DUCTS	2"	B
FLEXIBLE DUCTS	1"	A
ROUND LOW AND MEDIUM VELOCITY SUPPLY DUCTS	1"	A

DUCTWORK:

1. GENERAL
- 1.01. SECTION INCLUDES
  - A. METAL DUCTWORK.
  - B. CASING AND PLENUMS.
- 1.02. QUALITY ASSURANCE
  - A. PERFORM WORK IN ACCORDANCE WITH SMACNA - HVAC DUCT CONSTRUCTION STANDARDS - METAL AND FLEXIBLE.
  - B. MAINTAIN ONE COPY OF DOCUMENT ON SITE.

2. PRODUCTS
- 2.01. MATERIALS
  - A. GALVANIZED STEEL DUCTS: ASTM A525 AND ASTM A527 GALVANIZED STEEL SHEET, LOCK-FORMING QUALITY, HAVING G90 ZINC COATING OF IN CONFORMANCE WITH ASTM A90.
  - B. INSULATED FLEXIBLE DUCTS:
    1. BLACK POLYMER FILM SUPPORTED BY HELICALLY WOUND SPRING STEEL WIRE; FIBERGLASS INSULATION; POLYETHYLENE VAPOR BARRIER FILM.
    2. PRESSURE RATING: 4 INCHES WG POSITIVE AND 0.5 INCHES WG NEGATIVE.
    3. MAXIMUM VELOCITY: 4000 FPM.
    4. TEMPERATURE RANGE: -20 DEGREES F TO 175 DEGREES F.
  - C. FASTENERS: RIVETS, BOLTS, OR SHEET METAL SCREWS.
  - D. SEALANT:
    1. NON-HARDENING, WATER RESISTANT, FIRE RESISTIVE, COMPATIBLE WITH MATING MATERIALS; LIQUID USED ALONE OR WITH TAPE, OR HEAVY MASTIC.
  - E. HANGER ROD: ASTM A36; STEEL, GALVANIZED; THREADED BOTH ENDS, THREADED ONE END, OR CONTINUOUSLY THREADED.
- 2.02. DUCTWORK FABRICATION
  - A. FABRICATE AND SUPPORT IN ACCORDANCE WITH SMACNA HVAC DUCT CONSTRUCTION STANDARDS - METAL AND FLEXIBLE, AND AS INDICATED. PROVIDE DUCT MATERIAL, GAGES, REINFORCING, AND SEALING FOR OPERATING PRESSURES INDICATED.
  - B. CONSTRUCT T'S, BENDS, AND ELBOWS WITH RADIUS OF NOT LESS THAN 1-1/2 TIMES WIDTH OF DUCT ON CENTERLINE. WHERE NOT POSSIBLE AND WHERE RECTANGULAR ELBOWS ARE USED, PROVIDE AIR FOIL TURNING VANES. WHERE ACOUSTICAL LINING IS INDICATED, PROVIDE TURNING VANES OF PERFORATED METAL WITH GLASS FIBER INSULATION.
  - C. INCREASE DUCT SIZES GRADUALLY, NOT EXCEEDING 15 DEGREES DIVERGENCE WHEREVER POSSIBLE; MAXIMUM 30 DEGREES DIVERGENCE UPSTREAM OF EQUIPMENT AND 45 DEGREES CONVERGENCE DOWNSTREAM.
  - D. FABRICATE CONTINUOUSLY WELDED ROUND AND OVAL DUCT FITTINGS TWO GAGES HEAVIER THAN DUCT GAGES INDICATED IN SMACNA STANDARD. JOINTS SHALL BE MINIMUM 4 INCH CEMENTED SLIP JOINT, BRAZED OR ELECTRIC WELDED. PRIME COAT WELDED JOINTS.
- 2.04. DUCT INSULATION
  - A. FABRICATE IN ACCORDANCE WITH SMACNA HVAC DUCT CONSTRUCTION STANDARDS.

3. EXECUTION OUTSIDE OF DUCT.
- 3.01. INSTALLATION
  - A. INSTALL IN ACCORDANCE WITH MANUFACTURER'S INSTRUCTIONS.
  - B. INSTALL AND SEAL DUCTS IN ACCORDANCE WITH SMACNA HVAC DUCT CONSTRUCTION STANDARDS - METAL AND FLEXIBLE.
  - C. DUCT SIZES ARE INSIDE CLEAR DIMENSIONS. FOR LINED DUCTS, MAINTAIN SIZES INSIDE LINING.
  - D. PROVIDE OPENINGS IN DUCTWORK WHERE REQUIRED TO ACCOMMODATE THERMOMETERS AND CONTROLLERS. PROVIDE PILOT TUBE OPENINGS WHERE REQUIRED FOR TESTING OF SYSTEMS, COMPLETE WITH METAL CAN WITH SPRING DEVICE OR SCREW TO ENSURE AGAINST AIR LEAKAGE. WHERE OPENINGS ARE PROVIDED IN INSULATED DUCTWORK, INSTALL INSULATION MATERIAL INSIDE A METAL RING.
  - E. LOCATE DUCTS WITH SUFFICIENT SPACE AROUND EQUIPMENT TO ALLOW NORMAL OPERATING AND MAINTENANCE ACTIVITIES.
  - F. USE CRIMP JOINTS WITH OR WITHOUT BEAD FOR JOINING ROUND DUCT SIZES 8 INCH AND SMALLER WITH CRIMP IN DIRECTION OF AIR FLOW.
  - G. USE DOUBLE NUTS AND LOCK WASHERS ON THREADED ROD SUPPORTS.
  - H. CONNECT TERMINAL UNITS TO SUPPLY DUCTS WITH ONE FOOT MAXIMUM LENGTH OF FLEXIBLE DUCT. DO NOT USE FLEXIBLE DUCT TO CHANGE DIRECTION.
  - I. CONNECT DIFFUSERS TO LOW PRESSURE DUCTS WITH 5 FEET MAXIMUM LENGTH OF FLEXIBLE DUCT HELD IN PLACE WITH STRAP OR CLAMP.
  - J. CONNECT FLEXIBLE DUCTS TO METAL DUCTS WITH ADHESIVE PLUS SHEET METAL SCREWS.
  - K. DURING CONSTRUCTION PROVIDE TEMPORARY CLOSURES OF METAL OR TAPED POLYETHYLENE ON OPEN DUCTWORK TO PREVENT CONSTRUCTION DUST FROM ENTERING DUCTWORK SYSTEM.
- 3.02. SCHEDULES
  - A. DUCTWORK MATERIAL SCHEDULE

AIR SYSTEM	MATERIAL	PRESSURE CLASS
LOW PRESSURE SUPPLY	STEEL	2"
RETURN AND RELIEF	STEEL	-2"
OUTSIDE AIR INTAKE	STEEL	-2"

TESTING ADJUSTING & BALANCING

1. GENERAL
- 1.01. REFERENCES
  - A. AABC - NATIONAL STANDARDS FOR TOTAL SYSTEM BALANCE.
  - B. ADC - TEST CODE FOR GRILLES, REGISTERS, AND DIFFUSERS.
  - C. ASHRAE 111 - PRACTICES FOR MEASUREMENT, TESTING, ADJUSTING, AND BALANCING OF BUILDING HEATING, VENTILATION, AIR-CONDITIONING, AND REFRIGERATION SYSTEMS.
  - D. NEBB - PROCEDURAL STANDARDS FOR TESTING, ADJUSTING, AND BALANCING OF ENVIRONMENTAL SYSTEMS.
  - E. SMACNA - HVAC SYSTEMS TESTING, ADJUSTING, AND BALANCING.
- 1.02. SUBMITTALS
  - A. SUBMIT NAME OF ADJUSTING AND BALANCING AGENCY FOR APPROVAL WITHIN 30 DAYS AFTER AWARD OF CONTRACT.
  - B. FIELD REPORTS: INDICATE DEFICIENCIES IN SYSTEMS THAT WOULD PREVENT PROPER TESTING, ADJUSTING, AND BALANCING OF SYSTEMS AND EQUIPMENT TO ACHIEVE SPECIFIED PERFORMANCE.
  - C. PROVIDE REPORTS IN SOFT COVER, LETTER SIZE, 3-RING BINDER MANUALS, COMPLETE WITH INDEX PAGE AND INDEXING TABS, WITH COVER IDENTIFICATION AT FRONT AND SIDE. INCLUDE SET OF REDUCED DRAWINGS WITH AIR OUTLETS AND EQUIPMENT IDENTIFIED TO CORRESPOND WITH DATA SHEETS, AND INDICATING THERMOSTAT LOCATIONS.
  - D. TEST REPORTS: INDICATE DATA ON AABC NATIONAL STANDARDS FOR TOTAL SYSTEM BALANCE FORMS.
  - E. RECORD ACTUAL LOCATIONS OF FLOW MEASURING STATIONS, BALANCING VALVES AND ROUGH SETTING.
  - F. FURNISH COMPLETE HEAD SHEETS ON ALL FANS AND PUMPS, INCLUDING DOMESTIC RECIRCULATING WATER PUMPS - INLET AND OUTLET PRESSURES, FLOWS AND TEMPERATURES, RATED AND ACTUAL MOTOR DATA.
- 1.03. QUALITY ASSURANCE
  - A. PERFORM TOTAL SYSTEM BALANCE IN ACCORDANCE WITH AABC NATIONAL STANDARDS FOR FIELD MEASUREMENT AND INSTRUMENTATION, TOTAL SYSTEM BALANCE.

2. EXECUTION
- 2.01. EXAMINATION
  - A. VERIFY THAT SYSTEMS ARE COMPLETE AND OPERABLE BEFORE COMMENCING WORK. ENSURE THE FOLLOWING CONDITIONS:
    1. SYSTEMS ARE STARTED AND OPERATING IN A SAFE AND NORMAL CONDITION.
    2. TEMPERATURE CONTROL SYSTEMS ARE INSTALLED COMPLETE AND OPERABLE.
    3. PROPER THERMAL OVERLOAD PROTECTION IS IN PLACE FOR ELECTRICAL EQUIPMENT.
    4. FINAL FILTERS ARE CLEAN AND IN PLACE. IF REQUIRED, INSTALL TEMPORARY MEDIA IN ADDITION TO FINAL FILTERS.
    5. DUCT SYSTEMS ARE CLEAN OF DEBRIS.
    6. FANS ARE ROTATING CORRECTLY.
    7. VOLUME DAMPERS ARE IN PLACE AND OPEN.
    8. ALL COIL FINS ARE CLEANED AND COMBED.
    9. ACCESS DOORS ARE CLOSED AND DUCT END CAPS ARE IN PLACE.
    10. AIR OUTLETS ARE INSTALLED AND CONNECTED.
    11. DUCT SYSTEM LEAKAGE IS MINIMIZED.
    12. HYDRONIC SYSTEMS ARE FLUSHED, FILLED, AND VENTED.
    13. SERVICE AND BALANCE VALVES ARE OPEN.
  - B. SUBMIT FIELD REPORTS. REPORT DEFECTS AND DEFICIENCIES NOTED DURING PERFORMANCE OF SERVICES WHICH PREVENT SYSTEM BALANCE.
  - C. BEGINNING OF WORK MEANS ACCEPTANCE OF EXISTING CONDITIONS.
- 2.02. PREPARATION
  - A. PROVIDE INSTRUMENTS REQUIRED FOR TESTING, ADJUSTING, AND BALANCING OPERATIONS. MAKE INSTRUMENTS AVAILABLE TO ARCHITECT/ENGINEER TO FACILITATE SPOT CHECKS DURING TESTING.
  - B. PROVIDE ADDITIONAL BALANCING DEVICES AS REQUIRED.
- 2.03. INSTALLATION TOLERANCES
  - A. AIR HANDLING SYSTEMS: ADJUST TO WITHIN PLUS OR MINUS 5 PERCENT OF DESIGN FOR SUPPLY SYSTEMS AND PLUS OR MINUS 10 PERCENT OF DESIGN FOR RETURN AND EXHAUST SYSTEMS.
  - B. AIR OUTLETS AND INLETS: ADJUST TOTAL TO WITHIN PLUS 10 PERCENT AND MINUS 5 PERCENT OF DESIGN TO SPACE. ADJUST OUTLETS AND INLETS IN SPACE TO WITHIN PLUS OR MINUS 10 PERCENT OF DESIGN.
  - C. HYDRONIC SYSTEMS: ADJUST TO WITHIN PLUS OR MINUS 10 PERCENT OF DESIGN.
- 2.04. ADJUSTING
  - A. ENSURE RECORDED DATA REPRESENTS ACTUAL MEASURED OR OBSERVED CONDITIONS.
  - B. PERMANENTLY MARK SETTINGS OF VALVES, DAMPERS, AND OTHER ADJUSTMENT DEVICES ALLOWING SETTINGS TO BE RESTORED. SET AND LOCK MEMORY STOPS.
  - C. LEAVE SYSTEMS IN PROPER WORKING ORDER, REPLACING BELT GUARDS, CLOSING ACCESS DOORS, CLOSING DOORS TO ELECTRICAL SWITCH BOXES, AND RESTORING THERMOSTATS TO SPECIFIED SETTINGS.
- 2.05. AIR SYSTEM PROCEDURE
  - A. ADJUST AIR HANDLING AND DISTRIBUTION SYSTEMS TO PROVIDE REQUIRED OR DESIGN SUPPLY, RETURN, AND EXHAUST AIR QUANTITIES AT SITE ALTITUDE.
  - B. MAKE AIR QUANTITY MEASUREMENTS IN DUCTS BY PITOT TUBE TRAVERSE OF ENTIRE CROSS SECTIONAL AREA OF DUCT.
  - C. MEASURE AIR QUANTITIES AT AIR INLETS AND OUTLETS.
  - D. ADJUST DISTRIBUTION SYSTEM TO OBTAIN UNIFORM SPACE TEMPERATURES FREE FROM OBJECTIONABLE DRAFTS AND NOISE.
  - E. USE VOLUME CONTROL DEVICES TO REGULATE AIR QUANTITIES ONLY TO EXTEND THAT ADJUSTMENTS DO NOT CREATE OBJECTIONABLE AIR MOTION OR SOUND LEVELS. EFFECT VOLUME CONTROL BY DUCT INTERNAL DEVICES SUCH AS DAMPERS AND SPLITTERS.
  - F. VARY TOTAL SYSTEM AIR QUANTITIES BY ADJUSTMENT OF FAN SPEEDS. PROVIDE DRIVE CHANGES REQUIRED. VARY BRANCH AIR QUANTITIES BY DAMPER REGULATION.
  - G. MEASURE STATIC AIR PRESSURE CONDITIONS ON AIR SUPPLY UNITS, INCLUDING FILTER AND COIL PRESSURE DROPS, AND TOTAL PRESSURE ACROSS THE FAN. MAKE ALLOWANCES FOR 50 PERCENT LOADING OF FILTERS.
  - H. ADJUST OUTSIDE AIR AUTOMATIC DAMPERS, OUTSIDE AIR, RETURN AIR, AND EXHAUST DAMPERS FOR DESIGN CONDITIONS.
  - I. MEASURE TEMPERATURE CONDITIONS ACROSS OUTSIDE AIR, RETURN AIR, AND EXHAUST DAMPERS TO CHECK LEAKAGE.
  - J. WHERE MODULATING DAMPERS ARE PROVIDED, TAKE MEASUREMENTS AND BALANCE AT EXTREME CONDITIONS. BALANCE VARIABLE VOLUME SYSTEMS AT MAXIMUM AIR FLOW RATE, FULL COOLING, AND AT MINIMUM AIR FLOW RATE, FULL HEATING.
  - K. MEASURE BUILDING STATIC PRESSURE AND ADJUST SUPPLY, RETURN, AND EXHAUST AIR SYSTEMS TO PROVIDE REQUIRED RELATIONSHIP BETWEEN EACH TO MAINTAIN APPROXIMATELY 0.05 INCHES POSITIVE STATIC PRESSURE NEAR THE BUILDING ENTRIES.
  - L. CHECK ALL UNITS FOR MOTORIZED DAMPER LEAKAGE. ADJUST AIR QUANTITIES WITH MIXING DAMPERS SET FIRST FOR COOLING, THEN HEATING, THEN MODULATING.
- 2.06. WATER SYSTEM PROCEDURE
  - A. ADJUST HYDRONIC HEATING AND COOLING AND DOMESTIC HOT WATER RECIRCULATING WATER SYSTEMS TO PROVIDE REQUIRED OR DESIGN QUANTITIES.
  - B. USE CALIBRATED VENTURI TUBES, ORIFICES, OR OTHER METERED FITTINGS AND PRESSURE GAGES TO DETERMINE FLOW RATES FOR SYSTEM BALANCE. WHERE FLOW METERING DEVICES ARE NOT INSTALLED, BASE FLOW BALANCE ON TEMPERATURE DIFFERENCE ACROSS VARIOUS HEAT TRANSFER ELEMENTS IN THE SYSTEM.
  - C. ADJUST SYSTEMS TO PROVIDE SPECIFIED PRESSURE DROPS AND FLOWS THROUGH HEAT TRANSFER ELEMENTS PRIOR TO THERMAL TESTING. PERFORM BALANCING BY MEASUREMENT OF TEMPERATURE DIFFERENTIAL IN CONJUNCTION WITH AIR BALANCING.
  - D. EFFECT SYSTEM BALANCE WITH AUTOMATIC CONTROL VALVES FULLY OPEN TO HEAT TRANSFER ELEMENTS.
  - E. EFFECT ADJUSTMENT OF WATER DISTRIBUTION SYSTEMS BY MEANS OF BALANCING COCKS, VALVES, AND FITTINGS. DO NOT USE SERVICE OR SHUT-OFF VALVES FOR BALANCING UNLESS INDEXED FOR BALANCE POINT.
  - F. WHERE AVAILABLE PUMP CAPACITY IS LESS THAN TOTAL FLOW REQUIREMENTS OR INDIVIDUAL SYSTEM PARTS, FULL FLOW IN ONE PART MAY BE SIMULATED BY TEMPORARY RESTRICTION OF FLOW TO OTHER PARTS.
- 2.07. SYSTEM COMMISSIONING
  - A. THE AIR BALANCER SHALL INCLUDE ADEQUATE TIME IN HIS BID TO ASSIST IN COMMISSIONING OF THE HVAC SYSTEMS.
  - B. THE BALANCER SHALL INCLUDE ADEQUATE TIME FOR THE COMMISSIONING OF THE SMOKE CONTROL SYSTEMS AND SHALL BE PRESENT AND INVOLVED IN THE SET-UP AND TESTING OF THESE SYSTEMS IN THE PRESENCE OF THE OWNER AND REGULATORY BODIES.

AIR INLETS AND OUTLETS

PART 1 - GENERAL

1.01 SECTION INCLUDES
- A. REGISTERS/GRILLES.

PART 2 - PRODUCTS

2.01 MANUFACTURERS
- A. TITUS.
- B. KRUEGER.
- C. PRICE.
- D. CARNES.
- E. METALAIRE.

2.02 RETURN GRILLES/REGISTERS
- A. RETURN GRILLES SHALL BE 1/2" BLADE SPACING WITH 0 DEGREE FIXED DEFLECTION BLADES. BLADES SHALL BE PARALLEL TO THE LONG DIMENSION OF THE GRILLE OR REGISTER.
- B. CONSTRUCTION SHALL BE OF STEEL OR ALUMINUM AS SCHEDULED WITH A 1-1/4" WIDE BORDER ON ALL SIDES. SCREW HOLES SHALL BE COUNTERSUNK FOR A NEAT APPEARANCE.
- C. DEFLECTION BLADES SHALL BE CONTOURED TO A SPECIFICALLY DESIGNED AND TESTED CROSS-SECTION TO MEET PUBLISHED TEST DATA. BLADES SHALL BE FIRMLY HELD IN PLACE BY MULLIONS FROM BEHIND THE GRILLE AND FIXED IN PLACE BY WELDING.
- D. THE GRILLE FINISH SHALL BE BAKED ANODIC ACRYLIC PAINT AS SELECTED BY THE ARCHITECT.
- E. OPPOSED BLADE VOLUME DAMPER SHALL BE CONSTRUCTED OF HEAVY GAUGE STEEL, OPERABLE FROM THE FACE OF THE REGISTER.

2.03 SUPPLY REGISTERS/GRILLES
- A. TYPE: STREAMLINED AND INDIVIDUALLY ADJUSTABLE AIR FOIL BLADES, 3/4 INCH MINIMUM DEPTH, 3/4 INCH MAXIMUM SPACING WITH SPRING OR OTHER DEVICE TO SET BLADES, HORIZONTAL FACE, DOUBLE DEFLECTION.
- B. FRAME: 1_1/4 INCH MARGIN WITH COUNTERSUNK SCREW MOUNTING AND GASKET.
- C. FABRICATION: STEEL WITH 20 GAGE MINIMUM FRAME, WITH FACTORY BAKED ENAMEL FINISH SELECTED BY ARCHITECT.
- D. DAMPER: INTEGRAL, GANG_OPERATED OPPOSED BLADE TYPE WITH REMOVABLE KEY OPERATOR, OPERABLE FROM FACE.

PART 3 - EXECUTION

3.01 INSTALLATION
- A. INSTALL IN ACCORDANCE WITH MANUFACTURER'S INSTRUCTIONS.
- B. CHECK LOCATION OF OUTLETS AND INLETS AND MAKE NECESSARY ADJUSTMENTS IN POSITION TO CONFORM WITH ARCHITECTURAL FEATURES, SYMMETRY, AND LIGHTING ARRANGEMENT.
- C. INSTALL DIFFUSERS TO DUCTWORK WITH AIR TIGHT CONNECTION.
- D. PROVIDE BALANCING DAMPERS ON DUCT TAKE_OFF TO DIFFUSERS, AND GRILLES AND REGISTERS, DESPITE WHETHER DAMPERS ARE SPECIFIED AS PART OF THE DIFFUSER, OR GRILLE AND REGISTER ASSEMBLY.
- E. PAINT DUCTWORK VISIBLE BEHIND AIR OUTLETS AND INLETS MATTE BLACK.

DUCTWORK ACCESSORIES

PART 1 GENERAL

1.01 SECTION INCLUDES
- A. AIR TURNING DEVICES/EXTRACTORS.
- B. BACKDRAFT DAMPERS.
- C. FLEXIBLE DUCT CONNECTIONS.
- D. VOLUME CONTROL DAMPERS.

PART 2 PRODUCTS

2.01 AIR TURNING DEVICES/EXTRACTORS
- A. MULTI_BLADE DEVICE WITH BLADES ALIGNED IN SHORT DIMENSION; STEEL CONSTRUCTION; WITH INDIVIDUALLY ADJUSTABLE BLADES, MOUNTING STRAPS.

2.02 BACKDRAFT DAMPERS
- A. ACCEPTABLE MANUFACTURERS:
  1. RUSKIN.
  2. VENT PRODUCTS.
  3. AMERICAN WARMING AND VENTILATING.
- B. GRAVITY BACKDRAFT DAMPERS, SIZE 18 X 18 INCHES OR SMALLER, FURNISHED WITH AIR MOVING EQUIPMENT AS INDICATED ON PLANS: AIR MOVING EQUIPMENT MANUFACTURERS STANDARD CONSTRUCTION.
- C. MULTI_BLADE, PARALLEL ACTION GRAVITY BALANCED BACKDRAFT DAMPERS: 16 GAGE THICK GALVANIZED STEEL, WITH CENTER PIVOTED BLADES OF MAXIMUM 6 INCH WIDTH, WITH FELT OR FLEXIBLE VINYL SEALED EDGES, LINKED TOGETHER IN RATTLE_FREE MANNER WITH 90 DEGREE STOP, STEEL BALL BEARINGS, AND PLATED STEEL PIVOT PIN; ADJUSTMENT DEVICE TO PERMIT SETTING FOR VARYING DIFFERENTIAL STATIC PRESSURE.
- D. BAROMETRIC RELIEF DAMPERS SHALL BE EQUAL TO RUSKIN MODEL CBD2 COUNTER BALANCED EXTRUDED ALUMINUM BACK DRAFT DAMPERS. ADJUSTABLE FOR RELIEF OF PRESSURES LESS THAN 0.01 INCHES SP, WG.

2.03 FLEXIBLE DUCT CONNECTIONS
- A. FABRICATE IN ACCORDANCE WITH SMACNA HVAC DUCT CONSTRUCTION STANDARDS _ METAL AND FLEXIBLE, AND AS INDICATED.
- B. CONNECTOR: FABRIC CRIMPED INTO METAL EDGING STRIP.
  1. FABRIC: UL LISTED FIRE_RETARDANT NEOPRENE COATED WOVEN GLASS FIBER FABRIC TO NFPA 90A, MINIMUM DENSITY 30 OZ PER SQ YD.
  2. NET FABRIC WIDTH: APPROXIMATELY 3 INCHES WIDE.
- C. LEADED VINYL SHEET: MINIMUM 0.55 INCH THICK, 0.87 LBS PER SQ FT, 10 DB ATTENUATION IN 10 TO 10,000 HZ RANGE.

2.04 VOLUME CONTROL DAMPERS.
- A. MANUFACTURERS:
  1. RUSKIN.
  2. AIR BALANCE.
  3. VENT PRODUCTS.
- B. FABRICATE IN ACCORDANCE WITH SMACNA HVAC DUCT CONSTRUCTION STANDARDS _ METAL AND FLEXIBLE, AND AS INDICATED.
- C. SINGLE BLADE DAMPERS: FABRICATE FOR DUCT SIZES UP TO 6 X 30 INCH.
- D. MULTI_BLADE DAMPER: FABRICATE OF OPPOSED BLADE PATTERN WITH MAXIMUM BLADE SIZES 4 X 72". ASSEMBLE CENTER AND EDGE CRIMPED BLADES IN PRIME COATED OR GALVANIZED CHANNEL FRAME WITH SUITABLE HARDWARE.
- E. END BEARINGS: EXCEPT IN ROUND DUCTWORK 12 INCHES AND SMALLER, PROVIDE END BEARINGS. ON MULTIPLE BLADE DAMPERS, PROVIDE OIL_IMPREGNATED NYLON OR SINTERED BRONZE BEARINGS.
- F. QUADRANTS:
  1. PROVIDE LOCKING, INDICATING QUADRANT REGULATORS ON SINGLE AND MULTI_BLADE DAMPERS.
  2. ON INSULATED DUCTS MOUNT QUADRANT REGULATORS ON STAND_OFF MOUNTING BRACKETS, BASES, OR ADAPTERS.
  3. WHERE ROD LENGTHS EXCEED 30 INCHES PROVIDE REGULATOR AT BOTH ENDS.

PART 3 EXECUTION

3.01 INSTALLATION
- A. INSTALL ACCESSORIES IN ACCORDANCE WITH MANUFACTURER'S INSTRUCTIONS, NFPA 90A, AND FOLLOW SMACNA HVAC DUCT CONSTRUCTION STANDARDS _ METAL AND FLEXIBLE
- B. PROVIDE BACKDRAFT DAMPERS ON EXHAUST FANS OR EXHAUST DUCTS NEAREST TO OUTSIDE AND WHERE INDICATED.
- C. PROVIDE FLEXIBLE CONNECTIONS IMMEDIATELY ADJACENT TO EQUIPMENT IN DUCTS ASSOCIATED WITH ALL FANS AND MOTORIZED EQUIPMENT, AND SUPPORTED BY VIBRATION ISOLATORS.
- D. PROVIDE BALANCING DAMPERS AT POINTS ON SUPPLY, RETURN, AND EXHAUST SYSTEMS WHERE BRANCHES ARE TAKEN FROM LARGER DUCTS AS REQUIRED FOR AIR BALANCING. INSTALL MINIMUM 2 DUCT WIDTHS FROM DUCT TAKE_OFF.
- E. PROVIDE BALANCING DAMPERS ON DUCT TAKE_OFF TO DIFFUSERS, GRILLES, AND REGISTERS, REGARDLESS OF WHETHER DAMPERS ARE SPECIFIED AS PART OF THE DIFFUSER, GRILLE, OR REGISTER ASSEMBLY.
- F. MANUAL BALANCING DAMPERS SHALL BE MULTI BLADE TYPE FOR ANY DUCT WHERE THE DIMENSION PERPENDICULAR TO THE DAMPER BLADES IS GREATER THAN 14".

SUPPORTS AND ANCHORS

PART 1 - GENERAL

1.01 WORK INCLUDED
- A. PIPE, DUCT AND EQUIPMENT HANGERS, SUPPORTS AND ASSOCIATED ANCHORS.
- B. SLEEVES AND SEALS.
- C. FLASHING AND SEALING EQUIPMENT.
- D. MISCELLANEOUS STEEL SUPPORTS.

PART 2 - PRODUCTS

2.01 ACCEPTABLE MANUFACTURERS
- A. GRINNELL.
- B. UNI-STRUT
- C. B-LINE.

2.02 PIPE HANGERS AND SUPPORTS
- A. FIRE PROTECTION PIPING:
  0. CONFORM TO NFPA 13.
  1. HANGERS FOR PIPE SIZES 1/2 TO 1-1/2 INCHES: MALLEABLE IRON OR CARBON STEEL, ADJUSTABLE SWIVEL, SPLIT RING.
  2. HANGERS FOR PIPE SIZES 2 INCHES AND OVER: CARBON STEEL, ADJUSTABLE, CLEVIS.
  3. WALL SUPPORT FOR PIPE SIZES TO 3 INCHES: CAST IRON HOOK.
  4. WALL SUPPORT FOR PIPE SIZES 4 INCHES AND OVER: WELDED STEEL BRACKET AND WROUGHT STEEL CLAMP.
  5. VERTICAL SUPPORT: STEEL RISER CLAMP.
  6. FLOOR SUPPORT: CAST IRON ADJUSTABLE PIPE SADDLE, LOCKNUT, NIPPLE, FLOOR FLANGE AND CONCRETE PIER OR STEEL SUPPORT.
- B. PLUMBING PIPING - DWV:
  1. HANGERS FOR PIPE SIZES 1/2 TO 1-1/2 INCHES: MALLEABLE IRON OR CARBON STEEL, ADJUSTABLE SWIVEL, SPLIT RING.
  2. HANGERS FOR PIPE SIZES 2 INCHES AND OVER: CARBON STEEL, ADJUSTABLE, CLEVIS.
  3. MULTIPLE OR TRAPEZE HANGERS: STEEL CHANNELS WITH WELDED SPACERS AND HANGER RODS OR FORMED STEEL FRAMING.
  4. WALL SUPPORT FOR PIPE SIZES TO 2-1/2 INCHES: CAST IRON HOOK.
  5. WALL SUPPORT FOR PIPE SIZES 3 INCHES AND OVER: WELDED STEEL BRACKET AND WROUGHT STEEL CLAMP.
  6. VERTICAL SUPPORT: STEEL RISER CLAMP.
  7. FLOOR SUPPORT: CAST IRON ADJUSTABLE PIPE SADDLE, LOCKNUT, NIPPLE, FLOOR FLANGE AND CONCRETE PIER OR STEEL SUPPORT.
  8. COPPER PIPE SUPPORT: COPPER PLATED CARBON STEEL RING, ADJUSTABLE OR CARBON STEEL RING WITH DURA-COPPER OR DURA-GREEN EPOXY FINISH.
- C. PLUMBING PIPING - WATER:
  1. HANGERS FOR PIPE SIZES 1/2 TO 1-1/2 INCHES: MALLEABLE IRON OR CARBON STEEL, ADJUSTABLE SWIVEL, SPLIT RING.
  2. HANGERS FOR PIPE SIZES 2 INCHES AND OVER: CARBON STEEL, ADJUSTABLE, CLEVIS.
  3. HANGERS FOR HOT PIPE SIZES 2 INCHES TO 4 INCHES: CARBON STEEL, ADJUSTABLE, CLEVIS.
  4. HANGERS FOR HOT PIPE SIZES 6 INCHES AND OVER: ADJUSTABLE STEEL YOKE, CAST IRON ROLL, DOUBLE HANGER.
  5. MULTIPLE OR TRAPEZE HANGERS: STEEL CHANNELS WITH WELDED SPACERS AND HANGER RODS.
  6. MULTIPLE OR TRAPEZE HANGERS FOR HOT PIPE SIZES 6 INCHES AND OVER: STEEL CHANNELS WITH WELDED SPACERS AND HANGER RODS, CAST IRON ROLL.
  7. WALL SUPPORT FOR PIPE SIZES TO 2-1/2 INCHES: CAST IRON HOOK.
  8. WALL SUPPORT FOR PIPE SIZES 3 INCHES AND OVER: WELDED STEEL BRACKET AND WROUGHT STEEL CLAMP.
  9. WALL SUPPORT FOR HOT PIPE SIZES 6 INCHES AND OVER: WELDED STEEL BRACKET AND WROUGHT STEEL CLAMP WITH ADJUSTABLE STEEL YOKE AND CAST IRON ROLL.
  10. VERTICAL SUPPORT: STEEL RISER CLAMP.
  11. FLOOR SUPPORT FOR COLD PIPE: CAST IRON ADJUSTABLE PIPE SADDLE, LOCKNUT, NIPPLE, FLOOR FLANGE AND CONCRETE PIER OR STEEL SUPPORT.
  12. FLOOR SUPPORT FOR HOT PIPE SIZES UP TO 4 INCHES: CAST IRON ADJUSTABLE PIPE SADDLE, LOCKNUT, NIPPLE, FLOOR FLANGE AND CONCRETE PIER OR STEEL SUPPORT.
  13. FLOOR SUPPORT FOR HOT PIPE SIZES 6 INCHES AND OVER: ADJUSTABLE CAST IRON ROLL AND STAND, STEEL.
  14. COPPER PIPE SUPPORT: COPPER PLATED CARBON STEEL RING, ADJUSTABLE OR COPPER RING.

2.03 PIPE COVERING PROTECTION SHIELDS AND SUPPORTS
- A. HORIZONTAL PIPING WITH INSULATION:
  1. INSULATED PIPING 2 INCHES AND SMALLER: 18 GAUGE GALVANIZED STEEL, MINIMUM 12 INCHES LONG AT PIPE SUPPORT.
  2. INSULATED PIPING 2-1/2 INCHES THRU 4 INCHES: 16 GAUGE GALVANIZED STEEL, MINIMUM 12 INCHES LONG AT PIPE SUPPORT.
  3. INSULATED PIPING 5 AND 6 INCHES: 16 GAUGE GALVANIZED STEEL, MINIMUM 18 INCHES LONG AT PIPE SUPPORT.
  4. INSULATED PIPING 8 INCHES AND OVER: 14 GAUGE GALVANIZED STEEL, MINIMUM 24 INCHES LONG AT PIPE SUPPORT.
  5. ALL HORIZONTAL SHIELDS TO BE A MINIMUM OF 180 DEGREE SUPPORTS.
  6. SHIELDS AT PIPE CLAMPS OR "U" BOLTS TO BE 360 DEGREE SUPPORTS.
- B. VERTICAL STEEL PIPING WITH INSULATION:
  1. USE SAME GAUGE AND LENGTH AS CALLED FOR ABOVE IN PARAGRAPH 2.03.A., EXCEPT SHIELDS TO BE 360 DEGREE SHIELDS SECURED WITH "U" BOLTS OR "U" CLAMPS.
- C. VERTICAL COPPER PIPING WITH INSULATION:
  1. USE SAME GAUGE AND LENGTH AS CALLED FOR IN PARAGRAPH 2.03.A., EXCEPT SHIELDS TO BE 360 DEGREE SHIELDS WITH A PIECE OF SHEET LEAD AROUND THE PIPE AND UNDER THE SHIELD. SECURE SHIELD WITH "U" BOLTS OR "U" CLAMPS.

2.04 PIPE HANGER RODS
- A. ALL HANGER RODS SHALL BE STEEL, THREADED ON BOTH ENDS OR CONTINUOUS THREADED.
- B. SEE DETAIL ON THE DRAWING FOR SIZE OF RODS.

2.05 FLASHING
- B. METAL FLASHING: 26 GAUGE GALVANIZED STEEL.
- C. LEAD FLASHING: 5 LB/SQ.FT. SHEET LEAD FOR WATERPROOFING; ONE LB/SQ.FT. SHEET LEAD FOR SOUNDPROOFING.
- D. FLEXIBLE FLASHING: NON-PLASTICIZED LAMINATE SHEET COMPATIBLE WITH ROOFING. THICKNESS AS RECOMMENDED BY ROOFING MANUFACTURER.
- E. CAPS: STEEL, 22 GAUGE MINIMUM; 16 GAUGE AT FIRE RESISTANT ELEMENTS.

2.06 SLEEVES
- A. SLEEVES FOR PIPES THROUGH NON-FIRE RATED FLOORS: FORM WITH SCHEDULE 40 STEEL PIPE.
- B. SLEEVES FOR PIPES THROUGH NON-FIRE RATED WALLS: 18 GAUGE GALVANIZED STEEL.
- C. SLEEVES FOR PIPES THROUGH FOOTINGS AND POTENTIALLY WET FLOORS AND WALLS: FORM WITH STEEL SCHEDULE 40 STEEL PIPE.
- D. SLEEVES FOR PIPES THROUGH FIRE RATED AND FIRE RESISTIVE FLOORS AND WALLS: PREFABRICATED FIRE RATED SLEEVES (MINIMUM SCHEDULE 40 STEEL PIPE), INCLUDING FIREPROOFING SEALS, UL LISTED.
- E. SLEEVES FOR ROUND DUCTWORK: FORM WITH GALVANIZED STEEL OR ANGLE IRON.
- F. SLEEVES FOR RECTANGULAR DUCTWORK: FORM WITH GALVANIZED STEEL OR ANGLE IRON.
- G. FIRE AND SMOKE SEALANT: UL RATED, NON-COMBUSTIBLE, FLEXIBLE SEALANT OR PREFABRICATED METAL FIRE STOP SLEEVE.
- H. FABRICATION:
  1. SIZE SLEEVES LARGE ENOUGH TO ALLOW FOR MOVEMENT DUE TO EXPANSION AND CONTRACTION. PROVIDE FOR CONTINUOUS INSULATION WRAPPING THROUGH THE SLEEVE.
  2. DESIGN HANGERS WITHOUT DISENGAGEMENT OF SUPPORTED PIPE.
  3. PROVIDE COPPER PLATED OR SOLID COPPER HANGERS AND SUPPORTS FOR COPPER PIPING.

2.07 SUPPORTS AND HANGER FINISH
- A. ALL SHEET HANGERS AND SUPPORTS SHALL BE SHIPPED WITH A PRIME COAT PAINT FINISH.

PART 3 - EXECUTION

3.01 PIPE HANGER AND SUPPORT INSTALLATIONS
- A. HORIZONTAL STEEL AND COPPER PIPING SUPPORT SPACING:

NOMINAL PIPE SIZE (INCH)	MAX. HANGER SPACING (FT)	HANGER ROD DIAMETER (INCH)
1/2 TO 1-1/4	6	3/8
1-1/2 TO 2	10	3/8
2-1/2 TO 3	10	1/2
4 TO 6	10	5/8
8 TO 12	14	7/8
14 AND OVER	20	1
PVC (ALL SIZES)	6	3/8
CAST IRON BELL AND SPIGOT	5 OR JOINTS	5/8

- B. INSTALL HANGERS, SUPPORTS, CLAMPS AND ATTACHMENTS DIRECTLY FROM BUILDING STRUCTURE COMPLETE WITH INSERTS, BOLTS, RODS, NUTS AND WASHERS AND ACCESSORIES.
- C. PLACE A HANGER WITHIN 12 INCHES OF EACH HORIZONTAL ELBOW.
- D. USE HANGERS WITH 1-1/2 INCH MINIMUM VERTICAL ADJUSTMENT.
- E. SUPPORT HORIZONTAL CAST IRON PIPE ADJACENT TO EACH HUB, WITH 5 FEET MAXIMUM SPACING BETWEEN HANGERS.
- F. SUPPORT VERTICAL PIPING AT EVERY FLOOR. SUPPORT VERTICAL CAST IRON PIPE AT EACH FLOOR AND AT HUB.
- G. WHERE SEVERAL PIPES CAN BE INSTALLED IN PARALLEL AND AT SAME ELEVATION, PROVIDE MULTIPLE OR TRAPEZE HANGERS.
- H. SUPPORT RISER PIPING INDEPENDENTLY OF CONNECTED HORIZONTAL PIPING.
- I. PROVIDE NEOPRENE RUBBER STRIPS BETWEEN CAST IRON SOIL PIPE AND HANGER.
- J. PLACE A HANGER AT EACH ELBOW WHERE PIPE DROPS TO EQUIPMENT OR PUMPS.
- K. PROVIDE COPPER PLATED HANGERS AND SUPPORTS FOR COPPER PIPING OR SHEET LEAD PACKING BETWEEN HANGER OR SUPPORT AND COPPER PIPING.
- L. ALL HANGERS TO BE DESIGNED FOR PIPE MOVEMENT WITHOUT DISENGAGEMENT OF SUPPORTED PIPE.

3.02 FLASHING
- A. PROVIDE FLEXIBLE FLASHING AND METAL COUNTERFLASHING WHERE MECHANICAL EQUIPMENT, PIPING AND DUCTWORK PASS THROUGH EXTERIOR WALLS AND ROOF.
  1. ACCOMMODATE SPECIFIED ROOFING SYSTEMS.
  2. ENSURE COMPATIBILITY WITH NUMBER AND TYPE OF ROOFING PLIES.
  3. VERTICAL SURFACES: LAP FLASHINGS MINIMUM 3 INCHES.
  4. EMBED METAL FLASHING FLANGES IN ROOFING OR COMPOSITION FLASHING OR STRIPPING, BY EXTENDING FLANGES MINIMUM 6 INCHES FOR EMBEDMENT.
  5. PIPES THROUGH OUTSIDE WALLS: TURN FLANGE BACK INTO WALL AND SEAL.
- B. FLASH VENT AND SOIL PIPES PROJECTING 18 INCHES MINIMUM ABOVE FINISHED ROOF SURFACE WITH LEAD WORKED ONE (1) INCH MINIMUM INTO HUB, EIGHT (8) INCHES MINIMUM CLEAR ON SIDES WITH 24 X 24 INCH SHEET SIZE. FOR PIPES THROUGH OUTSIDE WALLS, TURN FLANGES BACK INTO WALL AND CAULK, METAL COUNTERFLASH AND SEAL.
- C. FLASH FLOOR DRAINS IN FLOORS WITH TOPPING OVER FINISHED AREAS WITH LEAD, 10 INCHES CLEAR ON SIZES WITH MINIMUM 36 X 36 INCH SHEET SIZE. FASTEN FLASHING TO DRAIN CLAMP DEVICE.
- D. SEAL FLOOR, SHOWER AND MOP SINK DRAINS WATERTIGHT TO ADJACENT MATERIALS.
- E. PROVIDE ACOUSTICAL LEAD FLASHING AROUND DUCTS AND PIPES PENETRATING EQUIPMENT ROOMS, INSTALLED IN ACCORDANCE WITH MANUFACTURER'S INSTRUCTIONS FOR SOUND CONTROL.
- F. PROVIDE PRE-FABRICATED EQUIPMENT CURBS FOR ALL ROOF MOUNTED EQUIPMENT. CURB TO BE 12 INCHES MINIMUM HIGH ABOVE ROOFING SURFACE. FLASH AND COUNTERFLASH WITH FLEXIBLE SHEET AND/OR SHEET METAL; SEAL WATERTIGHT.
- G. ADJUST STORM COLLARS TIGHT TO PIPE WITH BOLTS; CAULK AROUND TOP EDGE. USE STORM COLLARS ABOVE ROOF JACKS. SCREW VERTICAL FLANGE SECTION TO FACE OF CURB.

3.03 SLEEVES
- A. SET SLEEVES IN POSITION IN FORMWORK. PROVIDE REINFORCING AROUND SLEEVES.
- B. EXTEND SLEEVES THROUGH FLOORS ONE INCH ABOVE FINISHED FLOOR LEVEL FOR ALL PIPING WHICH GOES THROUGH 2ND FLOOR AND UP. CAULK SLEEVES FULL DEPTH AND PROVIDE FLOOR PLATE.
- C. WHERE PIPING OR DUCTWORK PENETRATES FLOOR, CEILING OR WALL, CLOSE OFF SPACE BETWEEN PIPE OR DUCT AND ADJACENT WORK WITH FIRE STOPPING INSULATION AND CAULK SEAL AIR TIGHT WITH FIRE SEALANT CAULK. PROVIDE CLOSE FITTING METAL COLLAR OR ESCUTCHEON COVERS AT BOTH SIDES OF PENETRATION.
- D. INSTALL STAINLESS STEEL OR CHROME PLATED STEEL ESCUTCHEONS AROUND PIPE AND OVER SLEEVES IN ALL FINISHED SPACES.
- E. CORE DRILL SLEEVE OPENINGS IN ALL EXISTING FLOORS, WALLS AND ROOF FOR INSTALLATION OF NEW WORK.

PLOTTED BY: RUBEN DELAFUENTE DATE PLOTTED: 6/30/2014 10:25 AM FILE PATH AND NAME: P:\037-A-2 Rockford Wellness Center Mech-Elec Design\M\037a2-M50

Larson & Darby Group
Architects Engineers Planners
Rockford Office - 4949 Harrison Ave., Suite 100, P.O.Box 5207 Rockford, IL. 61125 Tel (815) 484-0739 Fax (815) 229-9867

CITY OF ROCKFORD
120 N 3RD STREET
ROCKFORD, ILLINOIS

COPYRIGHT 2014
All drawn and written information appearing herein shall not be duplicated, disclosed, or otherwise used without the written consent of Larson & Darby Group

ISSUED FOR:	DATE
ISSUED FOR CONSTRUCTION	06-20-14

DRAWN	APPROVED
CRF	KBO

DATE: 06-26-2014
PROJECT NUMBER
24043
SHEET NUMBER
M5.0

OAS,LLC
O'HIGGINS AND ARNOLD SUSTAINABILITY, LLC
769 HEARTLAND DR., UNIT A SUGAR GROVE, ILLINOIS 60554

1 FLOOR PLAN – LIGHTING – ELECTRICAL
SCALE: 1/8" = 1'-0"

8' 0' 4' 8' 16'
(IN FEET)
1/8" = 1'-0"

North

GENERAL NOTES

1. CIRCUIT DESIGNATIONS ARE FOR CLARIFICATION ONLY. EXISTING PANEL "D" IS TO BE REUSED AND RE-CIRCUITED AS REQUIRED. CONTRACTOR TO PROVIDE CORRECTED PANEL SCHEDULE AT COMPLETION OF PROJECT.

LIGHTING FIXTURE SCHEDULE NOTES

1. ALL LIGHTING FIXTURES SHALL BE RATED FOR BUILDING SYSTEM VOLTAGE. CONTRACTOR MUST VERIFY ALL CONDITIONS.
2. ELECTRICAL CONTRACTOR SHALL PROVIDE EACH LIGHTING FIXTURE COMPLETE WITH PLASTER FRAMES AND ALL OTHER INSTALLATION AND HANGING HARDWARE AS REQUIRED FOR A COMPLETE AND FINISHED INSTALLATION AT EACH FIXTURE LOCATION.
3. VERIFY ALL LIGHTING FIXTURE LOCATIONS, FINISHES, VOLTAGE AND CEILING TYPES WITH ARCHITECT PRIOR TO ORDERING.
4. ELECTRICAL CONTRACTOR SHALL CHECK AND COORDINATE ALL LIGHTING FIXTURE CATALOG NUMBERS WITH THE INTENT OF FIXTURE DESCRIPTIONS, LISTED ACCESSORIES AND TYPE OF INSTALLATION.
5. UNLESS INDICATED OTHERWISE, ALL FLUORESCENT LIGHT FIXTURE BALLASTS SHALL BE ELECTRONIC OCTRON "T8" AS MANUFACTURED BY: ADVANCE, UNIVERSAL LIGHTING TECHNOLOGY & SYLVANIA/OSRAM. FLUORESCENT LAMPS SHALL HAVE A 3500°K COLOR AND 80 COLOR RENDERING INDEX.
6. ALL FIXTURES SHALL BE "U.L." LABELED. ALL LIGHTING FIXTURES EXPOSED TO WEATHER OR MOISTURE SHALL BEAR U.L. "WET LOCATION" LABEL AND LIGHTING FIXTURES EXPOSED TO DAMPNESS SHALL BEAR U.L. "DAMP LOCATION" LABEL.
7. EXIT/DIRECTIONAL SIGNS SHALL BE CEILING OR WALL MOUNTED AS PER FIELD CONDITION, REGARDLESS OF HOW THEY ARE SHOWN ON FLOOR PLANS. THEY SHALL BE INSTALLED COMPLETE WITH ALL INSTALLATION AND HANGING ACCESSORIES TO PROVIDE AN UNOBSTRUCTED VIEW OF EACH SIGN FACE AS REQUIRED. SIGNS SHALL BE ADJUSTED AS NECESSARY WITHOUT ADDITIONAL COST.
8. SIGNS TO READ "EXIT". SIGNS SHALL BE SINGLE OR DOUBLE FACED WITH OR WITHOUT DIRECTIONAL ARROWS, ALL AS SHOWN ON PLANS. SIGNS IN GENERAL SHALL BE CEILING MOUNTED, LOCATED AND ADJUSTED FOR BEST VIEW. ALL EXIT SIGNS IN HIGH CEILING AREAS TO BE MOUNTED ON WALL AT MAXIMUM OF +8'-0" ABOVE FLOOR. NO PENDANTS SHALL BE USED. SHADED PORTION DENOTES ILLUMINATION FACE.

LIGHTING FIXTURE SCHEDULE

TYPE	NO.	LAMP TYPE	MOUNTING	ACCEPTABLE MANUFACTURER AND CATALOG NUMBER	VOLTS	INPUT WATTS	DESCRIPTION	REMARKS
F1	3	32WT8	LAY-IN	METALUX 2GC332A125UNVEB8	120	90	2 X 4 LAY-IN	
F2	2	32WT8	SURFACE	METALUX WS 232A-120V-EB81-UNV	120	60	1 X 4 SURFACE MOUNT	ACRYLIC LENS
F3	1	LED	WALL	LUMARK LDWPPL4AED DPPETRWP	120	40		PHOTO ELECTRIC CONTROL
⊗		LED	CEILING	SURE-LITES LPX-7	120	5	FACES AS REQUIRED FOR PLACEMENT, UNIVERSAL MOUNT	WITH BATTERY PAK
⇦		LED	WALL	SURE-LITES APEL	120	0.78	WALL MOUNTED	WITH BATTERY PAK

Larson & Darby Group
Architects Engineers Planners
Rockford Office - 4949 Harrison Ave., Suite 100, P.O.Box 5207 Rockford, IL 61125 Tel (815) 484-0799 Fax (815) 229-9657

CITY OF ROCKFORD
120 N 3RD STREET
ROCKFORD, ILLINOIS

COPYRIGHT 2014
All drawn and written information appearing herein shall not be duplicated, disclosed, or otherwise used without the written consent of Larson & Darby Group

ISSUED FOR: DATE
ISSUED FOR CONSTRUCTION 06-20-14
DRAWN CRF
APPROVED KBO

DATE: 06-26-2014
PROJECT NUMBER 24043
SHEET NUMBER E1.1

PLOTTED BY: RUBEN DELAFUENTE DATE PLOTTED: 6/30/2014 10:23 AM FILE PATH AND NAME: P:\037-A-2 Rockford Wellness Center Mech-Elec Design\E\037a2-E11

OAS,LLC
O'HIGGINS AND ARNOLD SUSTAINABILITY, LLC
700 HEARTLAND DR., UNIT A SUGAR GROVE, ILLINOIS 60554

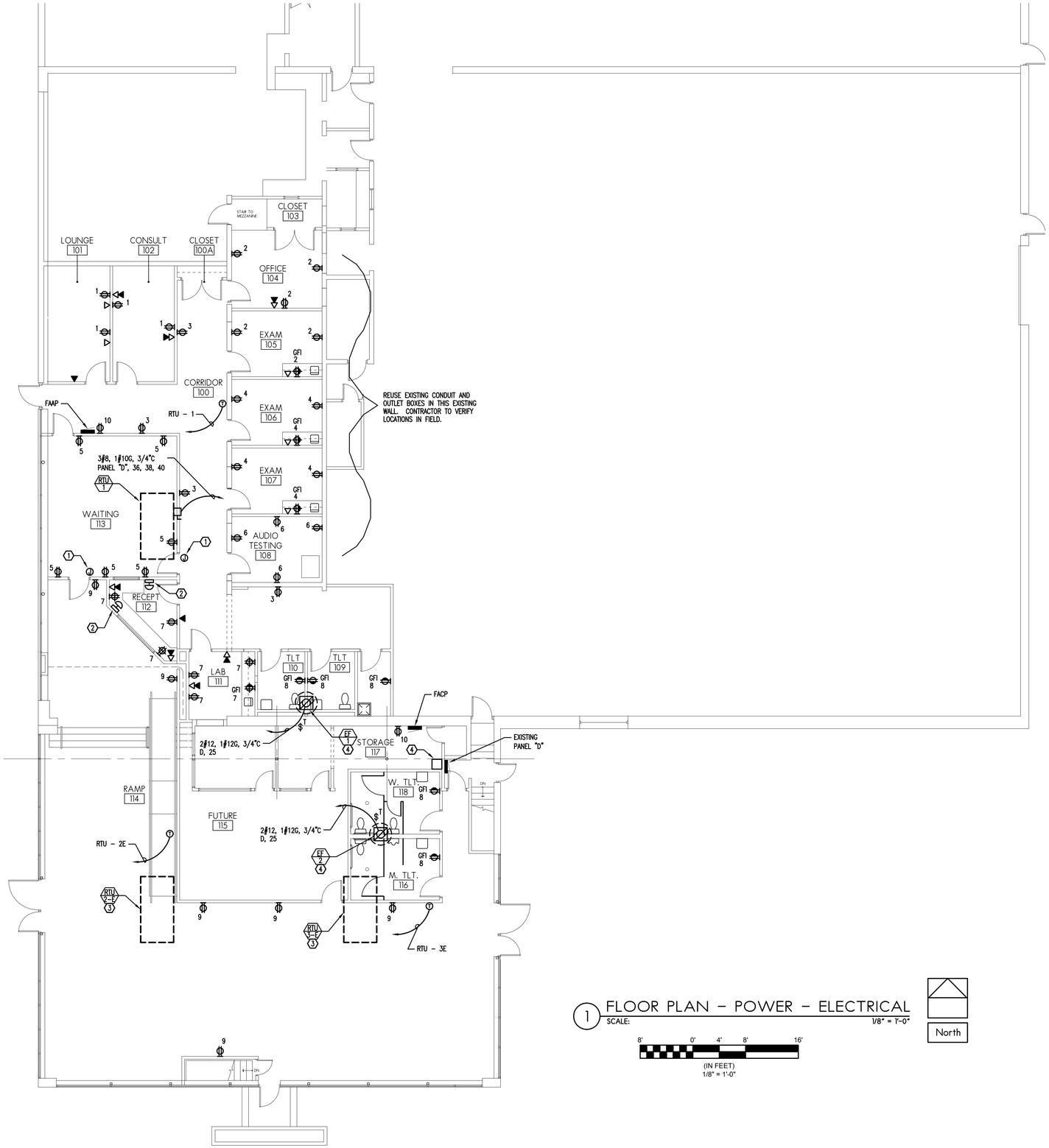

1 FLOOR PLAN - POWER - ELECTRICAL
SCALE: 1/8" = 1'-0"

8' 0' 4' 8' 16'
(IN FEET)
1/8" = 1'-0"

GENERAL NOTES

1. CIRCUIT DESIGNATIONS ARE FOR CLARIFICATION PURPOSED ONLY. EXISTING PANEL "D" IS TO BE REUSED AND RE-CIRCUITED AS REQUIRED. CONTRACTOR TO PROVIDE CORRECT PANEL SCHEDULE AT COMPLETION OF PROJECT.

KEYED NOTES

1. PROVIDE JUNCTION BOX ABOVE CEILING FOR DOOR STRIKE WIRING. WIRING TO DOOR STRIKE AND ENTRY PUSH BUTTON IN RECEPTION UNDER THIS CONTRACTOR. PROVIDE CONDUIT.
2. PUSH BUTTON DOOR STRIKE CONTROL.
3. UNIT CURRENTLY FED FROM PANEL "D".
4. EF - 1 & EF - 2 TO BE ON SAME CIRCUIT. PROVIDE TIME CLOCK (24/7) PROGRAMMABLE CONTROL EXHAUST FANS.

EXISTING PANEL BOARD SCHEDULE D

VOLTAGE: 120/208VOLT 1PHASE 3WIRE | MAIN (A): 200A WITH GROUND BUS | MCB | MLO | LOCATION: | MOUNT: | TYPE:

USE AND/OR AREA SERVED	C/B	CIR. NO.	A	B	CIR. NO.	C/B	USE AND/OR AREA SERVED
OUTLETS 101, 102	20/1	1	0		2	20/1	OUTLETS 104, 105
OUTLETS CORRIDOR	20/1	3	0	0	4	20/1	OUTLETS 106, 107
OUTLETS 113	20/1	5	0		6	20/1	OUTLETS 108
OUTLETS 111, 112	20/1	7	0	0	8	20/1	OUTETS 109, 110, JAN, 116, 118
OUTLETS 114	20/1	9	0		10	20/1	FAAP & FACP (1)
SPARE (EXPANSION)	20/1	11	0	0	12	20/1	SPARE (EXPANSION)
LIGHTS 101, 102, 113	20/1	13	0		14	20/1	LIGHTS 104, 105, 106, 107
LIGHTS 100	20/1	15	0	0	16	20/1	LIGHTS 108, 109, 110, 111, 112, JAN. CLOSET
LIGHTS 100	20/1	17	0		18	20/1	LIGHTS 116, 117, 118, 114
LIGHTS 114	20/1	19		0	20	20/1	LIGHTS 114
LIGHTS 115 (FUTURE EXPANSION), 117	20/1	21	0		22	20/1	SPARE (EXPANSION)
LIGHTS 114	20/1	23		0	24	20/1	EXIT LIGHTS AND EMERGENCY LIGHTS (1)
EF - 1 AND EF-2	20/1	25	0		26	20/1	OUTSIDE LIGHTS
SPARE	20/1	27		0	28	20/1	SPARE
RTU - 2 (EXISTING)	60/3	29	0		30	40/3	RTU - 3 (EXISTING)
		31	0	0	32		
		33	0		34		
SPARE	20/1	35		0	36	50/3	RTU - 1
SPARE	20/1	37	0		38		
SPACE	20/1	39		0	40		
SPACE	20/1	41	0		42	20/1	SPACE
TOTAL LOAD PER PHASE			0	0	TOTAL KVA:	0.0	
					AMPS:	0.0	

NOTE:
(1) PROVIDE LOCKOUT DEVICE ON BREAKER.
CIRCUITS ARE SHOWN FOR CLARIFICATION ONLY.

Larson & Darby Group
Architects Engineers Planners
Rockford Office - 4949 Harrison Ave., Suite 100, P.O.Box 5207 Rockford, IL 61125 Tel (815) 484-0799 Fax (815) 229-9607

CITY OF ROCKFORD
120 N 3RD STREET
ROCKFORD, ILLINOIS

COPYRIGHT 2014
All drawn and written information appearing herein shall not be duplicated, disclosed, or otherwise used without the written consent of Larson & Darby Group

ISSUED FOR: DATE
ISSUED FOR CONSTRUCTION 06-20-14

DRAWN CRF | APPROVED KBO

DATE: 06-26-2014
PROJECT NUMBER 24043
SHEET NUMBER E2.1

PLOTTED BY: RUBEN DELAFUENTE DATE PLOTTED: 6/30/2014 10:24 AM FILE PATH AND NAME: P:\037-A-2 Rockford Wellness Center Mech-Elec Design\E\037a2-E21

FIRE ALARM SYSTEM GENERAL NOTES

1. PROVIDE NEW FIRE ALARM SYSTEM. DEVICES SHALL BE APPROVED BY THE CITY OF ROCKFORD. SYSTEM TO BE COMPLETE AND OPERATIONAL WHEN WORK IS FINISHED. PROVIDE NAC PANELS AS REQUIRED FOR SYSTEM EXPANSION.

2. CONDUIT AND WIRE:
   - A. ALL WIRING SHALL BE ROUTED WITHIN APPROVED RACEWAY. ROUTE ALL CONDUIT CONCEALED IN FINISHED AREAS OF BUILDING. WHERE IMPOSSIBLE TO CONCEAL RACEWAY. CONDUIT SHALL BE MINIMUM 3/4". PROVIDE WIREMOLD AS DESCRIBED. (SEE PLAN NOTES FOR FURTHER INFORMATION)
     1. EXPOSED AREAS: PROVIDE WIREMOLD #V500 (IVORY) SURFACE RACEWAY INCLUDING ALL FITTINGS, BOXES AND MISC. AS REQUIRED. PAINT AS DIRECTED BY ARCHITECT.
     2. CONCEALED (INACCESSIBLE AREAS): PROVIDE CONDUIT AS REQUIRED. CONTRACTOR WILL BE RESPONSIBLE FOR PROPERLY SIZING ALL CONDUIT.
     3. ALL FIRE ALARM JUNCTION BOXES SHALL BE RED AND STENCILED WITH BLACK LETTERS.
     4. EXISTING FIRE ALARM SYSTEM CONDUIT MAY BE REUSED AS APPROPRIATE. HOWEVER, WHERE CONDUIT HAS DETERIORATED OR IS OTHERWISE UNACCEPTABLE (i.e. GREENFIELD, ETC.) NEW RACEWAY WILL BE PROVIDED AS HEREIN BEFORE STATED. SEE DEMOLITION NOTES FOR ADDITIONAL INFORMATION.
   - B. CONDUCTOR AND CONDUIT FILL WILL BE AS FOLLOWS:
     1. ALL ADDRESSABLE CIRCUITS WILL USE ONE (1) #18AWG TWISTED SHIELDED PAIR (TSP) CABLE FOR RACEWAY FILL. ONE (1) TSP CABLE IS EQUIVALENT TO TWO (2) #14AWG CONDUCTORS. ALL TWISTED SHIELDED PAIR CABLE WILL BE 300V INSULATION.
   - C. ALL WIRING WILL BE NEW AND IN ACCORDANCE WITH SUPPLIERS WIRING DIAGRAMS AND AS NOTED BELOW.
     1. FIRE ALARM CONTROL PANEL – 120V – 2#12AWG.
     2. ADDRESSABLE INITIATING DEVICES – 1 PAIR #18AWG TWISTED SHIELDED PAIR, (1)RED AND (1) BLACK.
     3. GENERAL ALARM – 2#14AWG PER ZONE, (1)RED AND (1) BLUE.
     4. HORN DEVICE – 2#14AWG PER CIRCUIT, (1)RED AND (1) BLACK. DO NOT EXCEED MORE THAN 12 UNITS PER CIRCUIT.
     5. VISUAL DEVICE – ON SAME CIRCUIT AS HORN DEVICES.
     6. SLAVE FAN RELAY – 2#14AWG BLUE WIRES FROM FIRE ALARM CONTROL PANEL TO FAN RELAY.
     7. MAGNETIC DOOR HOLDER DEVICE – 2#14AWG YELLOW WIRES FROM FIRE ALARM CONTROL PANEL.
     8. FIRE ALARM ANNUNCIATOR – 1#16AWG TWISTED SHIELDED PAIR AND 2#14.
   - D. ALL FIRE ALARM INDICATING AND INITIATING CIRCUITS WILL BE SUPERVISED.
   - E. SEE FIRE ALARM DETAILS AND SPECIFICATIONS FOR ADDITIONAL WIRING AND RACEWAY REQUIREMENTS.
3. PROVIDE ZONE ADAPTER MODULES AS REQUIRED IN FINISHED AREAS. INSTALL MODULES ABOVE CEILING UNLESS OTHERWISE NOTED. ALL INITIATING DEVICES SHALL BE ASSIGNED TO A SEPARATE ADDRESS.
4. PROVIDE NOTIFICATION APPLIANCE CIRCUIT POWER EXTENDER AS REQUIRED TO ACCOMMODATE EXCESSIVE LOADS OR DISTANCES. LOCATE AS REQUIRED TO PREVENT VANDALISM AND TAMPERING. PROVIDE 120V CIRCUIT AS REQUIRED. VERIFY REQUIREMENTS IN FIELD.
5. EACH SUPPLY UNIT WILL HAVE SMOKE DETECTOR AND FAN STOP RELAY TO STOP FAN ON ANY FIRE ALARM. ALL FANS TO BE RESET FROM THE FIRE ALARM CONTROL PANEL.
6. FIRE ALARM ANNUNCIATOR SHALL CONTAIN A SYSTEM KEY RESET SWITCH, TROUBLE LAMP/BUZZER, TROUBLE SILENCE SWITCH AND POWER ON LIGHT.
7. REFER TO FLOOR PLANS FOR EXACT LOCATION AND NUMBER OF DEVICES.
8. THE FIRE ALARM INSTALLING CONTRACTOR SHALL SUBMIT DRAWINGS AND SPECIFICATIONS INCLUDING BUT NOT LIMITED TO; END OF LINE DEVICE LOCATIONS, BATTERY CALCULATIONS, WIRING DIAGRAMS AND EQUIPMENT CUT SHEETS TO THE LOCAL FIRE PREVENTION BUREAU FOR REVIEW PRIOR TO BEGINNING CONSTRUCTION.
9. CONNECT KNOX BOX LOCATED BY MAIN ENTRANCE TO FIRE ALARM CONTROL PANEL. EXACT LOCATION OF KNOX BOX TO BE DETERMINED BY LOCAL FIRE AUTHORITY HAVING JURISDICTION.
10. PROVIDE CITY TIE CONNECTION AS REQUIRED BY AUTHORITY HAVING JURISDICTION. VERIFY REQUIREMENTS.
11. INSTALL CONDUIT AND WIRING FROM FIRE ALARM CONTROL PANEL TO TELEPHONE TERMINAL CABINET FOR CENTRAL STATION TIE. COORDINATE REQUIREMENTS WITH AUTHORITY HAVING JURISDICTION AND PROVIDE AS REQUIRED. ALL REQUIRED TELEPHONE LINES SHALL BE ARRANGED FOR BY OWNER.
12. COORDINATE ALL TAMPER AND FLOW SWITCH LOCATIONS AND QUANTITY WITH SPRINKLER DRAWINGS AND FIELD OBSERVATION. CONNECT AS REQUIRED.
13. INSTALL CONDUIT AND WIRING FROM FIRE ALARM CONTROL PANEL TO ELEVATOR CONTROL PANEL FOR ELEVATOR RECALL PROVISION.

1 FLOOR PLAN – FIRE ALARM – ELECTRICAL
SCALE: 1/8" = 1'-0"

8' 0' 4' 8' 16'
(IN FEET)
1/8" = 1'-0"

North

NOTE:
CONTRACTOR TO REMOVE ALL EXISTING FIRE ALARM DEVICES FROM SPACE. TURN OVER DEVICES TO PROPERTY MANAGER. CONTRACTOR SHALL BE RESPONSIBLE FOR REMAINING EXISTING FIRE ALARM SYSTEM SERVING OTHER SPACES TO REMAIN IN TACT AND OPERATIONAL.

FIRE ALARM

SYMBOL	DESCRIPTION
FCP	FIRE ALARM CONTROL PANEL
FAA	FIRE ALARM ANNUNCIATOR PANEL
S	MANUAL PULL STATION
AV	WALL MOUNTED AUDIO/VISUAL DEVICE
SD	CEILING MOUNTED SMOKE DETECTOR
WF	WATER FLOW SWITCH
VSS	VALVE SUPERVISORY SWITCH
RA	REMOTE TEST STATION WITH REMOTE INDICATOR LAMP
V	VISUAL DEVICE
DD	DUCT MOUNTED SMOKE DETECTOR
R	FAN SHUTDOWN RELAY
KB	KNOX BOX

OAS,LLC
O'HIGGINS AND ARNOLD SUSTAINABILITY, LLC
700 HEARTLAND DR., UNIT A SUGAR GROVE, ILLINOIS 60554

Larson & Darby Group
Architects Engineers Planners
Rockford Office - 4949 Harrison Ave., Suite 300, P.O.Box 5207 Rockford, IL 61125 Tel (815) 484-0799 Fax (815) 229-9657

CITY OF ROCKFORD
120 N 3RD STREET
ROCKFORD, ILLINOIS

COPYRIGHT 2014
All drawn and written information appearing herein shall not be duplicated, disclosed, or otherwise used without the written consent of Larson & Darby Group

ISSUED FOR: DATE
ISSUED FOR CONSTRUCTION 06-20-14

DRAWN CRF
APPROVED KBO

DATE: 06-26-2014
PROJECT NUMBER 24043
SHEET NUMBER E3.1

PLOTTED BY: RUBEN DELAFUENTE DATE PLOTTED: 6/30/2014 10:24 AM FILE PATH AND NAME: P:\037-A-2 Rockford Wellness Center Mech-Elec Design\E\037c2-E31

OAS,LLC
O'HIGGINS AND ARNOLD SUSTAINABILITY, LLC
769 HEARTLAND DR., UNIT A SUGAR GROVE, ILLINOIS 60554

GENERAL NOTES - ALL CONTRACTORS

1. DRAWINGS ARE GENERALLY DIAGRAMMATIC. ROUTING OF PIPING, DUCTWORK, CONDUITS, RACEWAYS, ETC, AS SHOWN ON DRAWINGS, DOES NOT INTEND TO SHOW EVERY RISE, DROP, OFFSET, FITTING NOR EVERY STRUCTURAL ELEMENT THAT MAY BE ENCOUNTERED DURING THE INSTALLATION OF THIS WORK. CONTRACTOR SHALL MAKE ANY REQUIRED CHANGES FROM THE GENERAL ROUTING SHOWN ON THESE DRAWINGS, SUCH AS OFFSETS, BENDS OR CHANGES IN ELEVATION DUE TO COORDINATION WITH THE WORK OF OTHER TRADES AND BUILDING CONSTRUCTION. ALL CHANGES SHALL BE MADE WITHOUT ADDITIONAL COST TO THE OWNER OR DELAY IN COMPLETION DATE OF THE PROJECT.

2. IT IS INTENDED THAT EQUIPMENT SHALL BE LOCATED SYMMETRICALLY WITH THE ARCHITECTURAL ELEMENTS OF THE BUILDING, NOTWITHSTANDING THE FACT THAT LOCATIONS INDICATED BY THESE DRAWINGS MAY BE DISTORTED FOR CLEARNESS OF PRESENTATION.

3. CONTRACTOR SHALL CHECK DRAWINGS OF OTHER TRADES TO VERIFY THAT SPACES IN WHICH THEIR WORK WILL BE INSTALLED ARE CLEAR OF OBSTRUCTIONS. WORK SHALL BE INSTALLED TO MAINTAIN MAXIMUM HEADROOM AND SPACE CONDITION AT ALL POINTS IN THE BUILDING. WHERE HEADROOM OR SPACE CONDITIONS APPEAR INADEQUATE, CONTRACTOR SHALL NOTIFY ARCHITECT/ENGINEER BEFORE PROCEEDING WITH THE INSTALLATION OF THEIR WORK.

4. CONTRACTOR SHALL FURNISH OTHER TRADES ADVANCE INFORMATION AND/OR SHOP DRAWINGS ON LOCATIONS AND SIZES OF PIPING, DUCTWORK, CONDUIT, RACEWAYS, EQUIPMENT, FRAMES, BOXES, SLEEVES AND OPENINGS, ETC. NEEDED FOR THEIR WORK TO PERMIT OTHER TRADES AFFECTED TO INSTALL THEIR WORK PROPERLY AND WITHOUT DELAY.

5. WHERE THERE IS EVIDENCE THAT WORK OF ONE TRADE WILL INTERFERE WITH WORK OF OTHER TRADES, ALL TRADES SHALL MEET ON JOB SITE TO WORK OUT SPACE CONDITIONS AND MAKE SATISFACTORY ADJUSTMENTS TO INSTALLATION OF THE NEW WORK. CONTRACTORS SHALL VERIFY EXACT LOCATIONS OF ALL DEVICES AND EQUIPMENT WITH FIELD CONDITIONS, SHOP DRAWINGS, AND WORK OF OTHER TRADES PRIOR TO ROUGH-IN. CONTRACTOR SHALL BE RESPONSIBLE, AT HIS OWN EXPENSE, FOR THE REMOVAL AND REINSTALLATION OF ANY PART OF THEIR WORK IF SAME WAS INSTALLED WITHOUT CONSULTING WITH OTHER TRADES BEFORE INSTALLING THEIR WORK.

6. THE SEQUENCE FOR THE INSTALLATION OF ALL WORK SHALL BE COORDINATED BETWEEN CONTRACTOR AND IN STRICT ACCORDANCE WITH ARCHITECT/ENGINEER AND OWNERS STIPULATION AS CALLED FOR IN THE SPECIFICATION AND/OR AS DIRECTED.

7. CONTRACTOR SHALL REFER TO THE ARCHITECTURAL AND STRUCTURAL CONTRACT DRAWINGS (BEFORE SUBMITTING HIS BID) TO FAMILIARIZE HIMSELF WITH THE EXTENT OF THE GENERAL CONTRACTOR WORK, CEILING HEIGHTS AND CLEARANCE FOR INSTALLING HIS WORK.

8. CONTRACTOR SHALL BE RESPONSIBLE FOR ALL CORING, CUTTING, PATCHING, REPAIRING, REFINISHING AND REMOVAL/REPLACEMENT OF NEW OR EXISTING BUILDING CONSTRUCTION REQUIRED TO ACCOMMODATE THE INSTALLATION OR REMOVAL OF THEIR WORK. ALL PATCHING, REPAIRING AND REFINISHING WORK SHALL BE PERFORMED BY THOSE REGULARLY INVOLVED IN THAT TRADE AND SHALL MATCH THE ADJACENT CONSTRUCTION AS CLOSELY AS POSSIBLE. CARE SHALL BE TAKEN SO AS NOT TO DAMAGE ANY EXISTING BUILDING CONSTRUCTION OR ITEMS THAT ARE TO REMAIN. ANY EXISTING FINISHES THAT ARE DAMAGED DURING THE INSTALLATION OF NEW WORK OR REMOVAL OF EXISTING WORK SHALL BE REPAIRED, REPLACED AND PAID FOR BY THE INSTALLING CONTRACTOR, TO THE SATISFACTION OF THE ARCHITECT AND OWNER. REFER TO ARCHITECTURAL DRAWINGS FOR EXISTING BUILDING CONSTRUCTION THAT IS TO REMAIN AND, THEREFORE, SUBJECT TO PATCHING, REPAIRING, REFINISHING, AND REMOVAL/ REPLACEMENT.

9. CONTRACTOR SHALL BE RESPONSIBLE FOR HIS OWN CLEAN UP DURING CONSTRUCTION. IF CONTRACTOR FAILS TO PROVIDE SUCH CLEAN UP, THE ARCHITECT/ENGINEER WILL DIRECT ANOTHER CONTRACTOR TO PERFORM THE CLEAN UP AND THE NEGLIGENT CONTRACTOR SHALL PAY THE ASSOCIATED BACK CHARGES AS DEEMED APPROPRIATE BY THE ARCHITECT/ENGINEER.

10. CONTRACTOR SHALL INSTALL ALL AUXILARY SUPPORTING STEEL AS REQUIRED FOR THE SUPPORTING OF THEIR PIPING, DUCTWORK, CONDUIT, TANKS, EQUIPMENT, ETC. ALL SUPPORTING STEEL FOR ITEMS ABOVE A SUSPENDED CEILING SHALL BE FROM BUILDING STRUCTURAL MEMBERS ONLY.

11. UNLESS INDICATED OTHERWISE, THE ARCHITECT/ENGINEER MAKES NO REPRESENTATION AS TO WHETHER OR NOT ANY HAZARDOUS OR CONTAMINATED MATERIALS (INCLUDING BUT NOT LIMITED TO ASBESTOS, PCB'S, CONTAMINATED SOILS, ETC.) ARE PRESENT WITHIN THE EXISTING BUILDING OR ON THE SITE. WORK SHOWN ON THE DRAWINGS AND/OR INDICATED IN THE SPECIFICATIONS SHALL NOT BE CONSTRUED TO CALL FOR CONTACT WITH ANY OF THESE MATERIALS. IF THESE MATERIALS ARE ENCOUNTERED OR SUSPECTED, THE CONTRACTOR SHALL NOT DISTURB THEM AND SHALL CONTACT THE ARCHITECT/ENGINEER IMMEDIATELY.

12. CONTRACTOR SHALL STORE ALL MATERIALS AND EQUIPMENT SHIPPED TO THE SITE IN A PROTECTED AREA. IF MATERIAL IS STORED OUTSIDE OF THE BUILDING, IT MUST BE STORED OFF THE GROUND A MINIMUM OF SIX INCHES (6") SET ON 6 X 6 PLANKS AND/ OR WOOD PALLETS. ALL MATERIAL AND EQUIPMENT MUST BE COMPLETELY COVERED WITH WATERPROOF TARPS OR VISQUINE. ALL PIPING AND DUCTWORK WILL HAVE THE ENDS CLOSED TO KEEP OUT DIRT AND OTHER DEBRIS. NO EQUIPMENT WILL BE ALLOWED TO BE STORED ON THE SITE UNLESS IT IS SITTING ON WOOD PLANKS AND COMPLETELY PROTECTED WITH WEATHERPROOF COVERS.

13. THE DRAWINGS, SCHEDULES AND SPECIFICATIONS HAVE BEEN PREPARED USING ONE MANUFACTURER FOR EACH PIECE OF EQUIPMENT AS THE BASIS FOR DIMENSIONAL DESIGN. IF THE CONTRACTOR PURCHASES EQUIPMENT LISTED AS A SPECIFIED ACCEPTABLE MANUFACTURER BUT IS NOT THE SCHEDULED MANUFACTURER USED FOR THE BASE DESIGN, THE CONTRACTOR SHALL BE RESPONSIBLE FOR CHECKING ALL THE DIMENSIONS OF THE EQUIPMENT TO VERIFY THAT IT WILL FIT IN THE SPACE SHOWN ON THE DRAWINGS. MINOR DEVIATIONS IN DIMENSIONS WILL BE PERMITTED, PROVIDED THE RATINGS MEET THOSE SHOWN ON THE DRAWINGS AND EQUIPMENT WILL PHYSICALLY FIT INTO THE SPACE ALLOCATED WITH SUITABLE ACCESS AROUND EQUIPMENT FOR OPERATION AND MAINTENANCE ON THE EQUIPMENT.

14. CONTRACTOR AND/OR MANUFACTURER SHALL VERIFY THAT THE CHARACTERISTICS OF THE EQUIPMENT HE SUBMITS FOR REVIEW MEETS THE CAPACITY AND DUTY SPECIFIED.

15. WHEN EQUIPMENT IS SUBMITTED FOR REVIEW AND DOES NOT MEET THE PHYSICAL SIZE OR ARRANGEMENT OF THAT SCHEDULED AND SPECIFIED, CONTRACTOR SHALL PAY FOR ALL ALTERATIONS REQUIRED TO ACCOMMODATE SUCH EQUIPMENT AT NO ADDITIONAL COST TO OWNER. CONTRACTOR WILL ALSO PAY ALL COSTS FOR ADDITIONAL WORK REQUIRED BY OTHER CONTRACTORS, OWNER, ARCHITECT OR ENGINEER TO MAKE CHANGES WHICH WOULD ALLOW THE EQUIPMENT TO FIT IN THE SPACE AND FUNCTION AS INTENDED.

16. CONTRACTOR SHALL FIELD VERIFY THE SIZE OF EXISTING OPENINGS, WINDOWS, DOORS, CORRIDORS, ROOMS, ETC. FOR ACCESS OF THE NEW EQUIPMENT INTO OR REMOVAL OF EXISTING EQUIPMENT FROM THE BUILDING. IF OPENINGS ARE TOO SMALL FOR ACCESS THEN CONTRACTOR SHALL, AT HIS OWN EXPENSE, PROVIDE NEW OR ENLARGED OPENINGS AND RESTORE SAME TO ORIGINAL SIZE AND CONDITION. CONTRACTOR MAY ELECT TO ORDER THE EQUIPMENT DISASSEMBLED AND/OR WITH SPLIT HOUSING FOR ENTRANCE INTO THE EXISTING SPACE OR BUILDING. CONTRACTOR SHALL REASSEMBLE EQUIPMENT AFTER IT IS IN THE SPACE AT HIS OWN EXPENSE.

GENERAL ELECTRICAL NOTES

1. REFER TO ARCHITECTURAL PLANS AND SPECIFICATIONS FOR ADDITIONAL GENERAL NOTES WHICH WILL APPLY HERE.

2. DO NOT SCALE DRAWINGS.

3. NOTES ON DRAWINGS SHALL APPLY TO ALL SIMILAR CONDITIONS WHETHER THEY ARE REPEATED OR NOT.

4. BOXES LOCATED ON OPPOSITE SIDES OF NON-FIRE RATED WALLS SHALL BE OFFSET A MINIMUM OF 6" HORIZONTALLY. BOXES ON OPPOSITE SIDES OF FIRE RATED WALL SHALL BE OFFSET A MINIMUM OF 24" HORIZONTALLY. "THRU THE WALL" BOXES SHALL NOT BE ALLOWED WITHOUT PRIOR WRITTEN APPROVAL OF THE ARCHITECT/ENGINEER.

5. ELECTRICAL CONTRACTOR SHALL VERIFY TOTAL CONNECTED LOAD/HP WITH ALL OTHER TRADES PRIOR TO WIRING OF ALL OTHER TRADES' EQUIPMENT. MAKE ANY CHANGES TO OVERCURRENT DEVICES AND FEEDER SIZE PER ELECTRICAL CODE AS REQUIRED.

6. ELECTRICAL CONTRACTOR SHALL VERIFY ALL FURNITURE, MODULAR FURNITURE AND EQUIPMENT LOCATIONS WITH ARCHITECTURAL PLANS, ELEVATIONS AND REVIEWED SHOP DRAWINGS. PRIOR TO MAKING THE ACTUAL ELECTRICAL INSTALLATION, THIS CONTRACTOR SHALL ADJUST RECEPTACLES, OUTLETS OR CONNECTION LOCATIONS TO ACCOMMODATE FURNITURE AND/OR EQUIPMENT.

7. ALL EXPOSED CABLES IN PLENUM CEILING SHALL BE APPROVED FOR PLENUM APPLICATION.

8. PROVIDE SLEEVES/CONDUITS FOR LOW VOLTAGE CABLES WHEN THEY TRAVERSE ABOVE NON ACCESSIBLE CEILING SPACE. ALSO, PROVIDE SLEEVES THROUGH MASONRY WALLS FOR LOW VOLTAGE CABLES. VERIFY SLEEVE/CONDUIT SIZE REQUIREMENTS AND LOCATION WITH THE CONTRACTOR INSTALLING LOW VOLTAGE SYSTEM.

9. UNLESS NOTED OTHERWISE, THE CONDUITS AND BACK BOXES SHALL BE CONCEALED WITHIN ALL DRY WALLS AND NEW MASONRY WALLS. SURFACE METAL RACEWAY SHALL BE USED FOR DEVICES ON EXISTING MASONRY WALLS AS MUCH AS PRACTICAL. THE SURFACE METAL RACEWAY SHALL BE ROUTED IN THE CORNER AND/OR ADJACENT TO WINDOW, DOOR FRAMEWORK ETC. SO IT IS AS INCONSPICUOUS AS POSSIBLE. FOR SAKE OF SIMPLICITY ONLY THE TERM "CONDUIT" IS USED IN MOST CASES IN THIS DOCUMENT. HOWEVER, BASED UPON ABOVE, THE SURFACE METAL RACEWAY AND CONDUIT SHALL BE USED AS APPLICABLE. WHERE SURFACE METAL RACEWAY IS USED ONE TWO CHANNEL RACEWAY WITH DIVIDER SHALL BE USED (FOR POWER & LOW VOLTAGE) WHERE APPLICABLE.

10. WHERE POWER AND LOW VOLTAGE OUTLETS (SUCH AS DATA OUTLETS) ARE SHOWN TOGETHER ON DRAWINGS, PROVIDE THEM ADJACENT TO EACH OTHER.

11. REFER TO PANEL DIVISION LINES FOR BRANCH CIRCUIT HOMERUN PANEL BOARD DESIGNATION, UNLESS NOTED OTHERWISE, IF APPLICABLE.

12. CIRCUIT NUMBERS SHOWN FOR EXISTING PANELS ARE FOR REFERENCE ONLY. USE NEXT AVAILABLE CIRCUITS AND PROVIDE APPROPRIATE SIZE BREAKERS.

13. REFER TO ARCHITECTURAL DRAWINGS FOR EXACT LOCATIONS OF ELECTRICAL EQUIPMENT & DEVICES. THE ELECTRICAL DRAWINGS ARE FOR CONCEPT ONLY.

14. THE SYSTEMS PROVIDED BY THIS CONTRACTOR SHALL BE COMPLETELY OPERATIONAL REGARDLESS OF OMISSION OF MINOR ITEMS, SUCH AS CIRCUIT NUMBER FOR RELAY, A CIRCUIT NUMBER NEXT TO A LIGHTING FIXTURE, POWER FOR CONTROL EQUIPMENT, ETC.

15. ALL OUTDOOR DEVICES SUCH AS RECEPTACLES, DISCONNECTS, SPEAKERS, LIGHTING FIXTURES, JUNCTION BOXES, ETC. SHALL BE OUTDOOR TYPE.

16. THE EXIT SIGNS ARE PROVIDED FOR BIDDING PURPOSE. FINAL LOCATION SHALL BE AS DETERMINED BY LOCAL FIRE MARSHALL. IF REQUIRED BY FIRE MARSHALL, PROVIDE ADDITIONAL EXIT SIGNS WITHOUT ADDITIONAL COST TO OWNER.

17. PROVIDE LOCKING CLIPS ON CIRCUIT BREAKERS SERVING EMERGENCY LIGHTING, FIRE ALARM SYSTEM, PA/INTERCOMM, TELEPHONE SYSTEM AND SECURITY SYSTEM LOAD.

18. DUE TO THE SMALL SCALE AND INTERFERENCE OF EXISTING EQUIPMENT, EACH AND EVERY ITEM IS NOT SHOWN. SHOWN INFORMATION IS INTENDED AS A GUIDE. CONTRACTOR SHALL VERIFY INFORMATION AND CONDITIONS IN THE FIELD.

19. COORDINATE THE FINAL LOCATION OF RECEPTACLES IN TELECOMMUNICATION CLOSETS WITH TELECOMMUNICATION EQUIPMENT VENDOR.

20. ALL RECEPTACLES LOCATED WITHIN 6' OF SOURCE OF WATER (SUCH AS SINK) AND ALL OUTDOOR RECEPTACLES SHALL BE GFCI TYPE, WHETHER SPECIFICALLY INDICATED OR NOT.

21. WHERE THE OUTLETS ARE SHOWN ON FURNITURE/DESK THEY SHALL BE PROVIDED EITHER UNDER THE DESK OR AS A PART OF MILLWORK AS INDICATED ON ARCHITECTURAL DRAWINGS. PROVIDE CONDUITS AND WIRING UNDER OR WITHIN THE FURNITURE/DESK. THE QUANTITY AND LOCATION OF INDICATED OUTLETS IS APPROXIMATE. COORDINATE EXACT REQUIREMENTS WITH ARCHITECT AND MILLWORK VENDOR. IF FURNITURE/DESK IS NEXT TO WALL, THE ROUGH-IN SHALL BE PROVIDED FROM WALLS. IF FURNITURE/DESK IS FREE STANDING, THE ROUGH-IN SHALL BE PROVIDED FROM FLOOR. THE POWER POLE IS NOT ALLOWED UNLESS SPECIFICALLY INDICATED.

22. COORDINATE THE LOCATION OF ELECTRICAL PANELS WITH OTHER TRADES SUCH THAT NO DUCTWORK, PIPING ETC. IS LOCATED ABOVE THEM.

23. VERIFY QUANTITY AND SIZE OF LUGS PROVIDED IN OTHER TRADE'S EQUIPMENT (FOR EXAMPLE, CHILLER, ELEVATOR, FIRE PUMP ETC.) BEFORE STARTING ANY WORK ASSOCIATED WITH SUCH EQUIPMENT. IF THEIR LUGS CANNOT ACCOMMODATE THE CABLES INDICATED IN ELECTRICAL DOCUMENT, PROVIDE LUG FITTINGS TO ACCOMMODATE CHANGE IN THE CABLES. PROVIDE SUCH FITTINGS IN A JUNCTION BOX AS CLOSE AS POSSIBLE TO THEIR EQUIPMENT. IF ALLOWED BY THE EQUIPMENT MANUFACTURER, SUCH FITTINGS MAY BE INSTALLED IN THEIR EQUIPMENT RATHER THAN IN A SEPARATE JUNCTION BOX.

24. PROVIDE SEPARATE DEDICATED GROUNDING CONDUCTOR IN EACH FEEDER AND BRANCH CIRCUIT WIRING CIRCUIT.

25. PROVIDE SMOKE DETECTOR WITHIN 5 FEET OF FIRE ALARM CONTROL PANEL, WHETHER SPECIFICALLY INDICATED OR NOT.

26. PROVIDE REMOTE TEST AND INDICATING STATION IN A READILY ACCESSIBLE AND VISIBLE SPACE FOR EACH DUCT SMOKE DETECTOR.

27. WHERE "VIF" IS INDICATED NEXT TO A DEVICE, CONTRACTOR SHALL VERIFY ITS REQUIREMENT IN FIELD. THIS INCLUDES VERIFICATION OF DEVICE TYPE, LOCATION, WIRING CONDUIT AND CIRCUIT BREAKER ETC. PROVIDE APPROPRIATE DEVICE, WIRING, CONDUIT, CIRCUIT BREAKER ETC. AS REQUIRED.

28. ALL RECEPTACLES FOR VENDING MACHINES, ICE MACHINES AND REFRIGERATORS SHALL BE GFCI TYPE WHETHER SPECIFICALLY INDICATED OR NOT.

29. PROVIDE BALLAST DISCONNECT FOR EACH FLUORESCENT FIXTURE TO MEET NEC 410.73

30. PROVIDE ONE WEATHERPROOF, GFI RECEPTACLE WITHIN 25' OF ROOF MOUNTED OR GRADE MOUNTED HVAC EQUIPMENT, WHETHER SPECIFICALLY INDICATED OR NOT AND FEED FROM NEAREST UNLOADED RECEPTACLE CIRCUIT.

31. WHETHER SPECIFICALLY INDICATED OR NOT, PROVIDE MINIMUM OF ONE DUCT SMOKE DETECTOR FOR AIR SUPPLY SYSTEM HAVING A CAPACITY GREATER THAN 2,000 CFM AND TWO DUCT SMOKE DETECTORS FOR AIR SUPPLY SYSTEM HAVING A CAPACITY GREATER THAN 15,000 CFM.

32. PROVIDE DEEPER BACK BOX AS REQUIRED FOR EACH DEVICE; FOR EXAMPLE MINIMUM OF 2.5" DEEP FOR WALL BOX TYPE OCCUPANCY SENSOR.

33. PROVIDE WEATHERPROOF TYPE WHILE-IN-USE COVER FOR ALL 15 AMP AND 20 AMP 120V. RECEPTACLES LOCATED IN OUTDOOR LOCATIONS WHETHER SPECIFICALLY INDICATED OR NOT.

34. RECEPTACLES LOCATED ADJACENT TO SINK IN WASHROOMS SHALL BE INSTALLED ON SIDE WALL OF THE SINK AND NOT THE FRONT WALL OF THE SINK REGARDLESS OF HOW THEY ARE SHOWN ON THE DRAWINGS. THE FRONT WALL SHALL BE LEFT AVAILABLE FOR MIRROR OR VANITY CABINET.

35. PROVIDE SLEEVES THRU FLOOR AND WALLS AS REQUIRED FOR LOW VOLTAGE CABLES. COORDINATE ALL REQUIREMENTS WITH LOW VOLTAGE CONTRACTORS.

36. THE PANEL DIRECTORY SHALL HAVE SPECIFIC LIST OF LOAD SERVED. THE GENERIC OR BROAD LIST IS NOT ACCEPTABLE. FOR EXAMPLE LISTING "LIGHTS IN CLASSROOM" IS NOT ADEQUATE. PROVIDE MORE SPECIFIC LIST SUCH AS "LIGHTS IN CLASSROOM 231, 234 AND STORAGE 239" SHALL BE PROVIDED TO REFLECT THE SPECIFIC LOAD SERVED.

37. UNLESS NOTED OTHERWISE, ALL WIRING SHALL BE IN CONDUIT EXCEPT LOW VOLTAGE WIRING ABOVE ACCESSIBLE CEILING SPACE. LOW VOLTAGE WIRING EXCEPT FIRE ALARM SYSTEM WIRING ABOVE ACCESSIBLE CEILING SPACE SHALL BE EXPOSED. ALL FIRE ALARM SYSTEM WIRING SHALL BE IN CONDUIT.

38. LOCATE THE OUTLETS FOR LCD PROJECTORS AS DIRECTED BY OWNER'S LCD PROJECTOR VENDOR TO PROVIDE OPTIMUM COVERAGE OF THE PROJECTOR.

39. UNLESS SPECIFICALLY INDICATED, ALL CONDUITS OTHER THAN IN ELECTRICAL/ MECHANICAL EQUIPMENT ROOMS SHALL BE CONCEALED. POWERPOLE OR CONDUIT FED FROM CEILING IS STRICTLY PROHIBITED.

40. INSTALL OCCUPANCY SENSORS SUCH THAT IT PROVIDES THE OPTIMUM COVERAGE. THE LOCATIONS OF OCCUPANCY SENSORS INDICATED ON DRAWINGS ARE FOR CONCEPT ONLY. FOR CERTAIN AREAS (SUCH AS ROOMS HAVING HIGH CEILING) WALL MOUNTED OR OTHER APPROPRIATE TYPE MULTIPLE SENSORS MAY HAVE TO BE PROVIDED. COORDINATE ALL REQUIREMENTS WITH OCCUPANCY SENSOR MANUFACTURER. CONNECT SWITCHES AND OCCUPANCY SENSORS SUCH THAT SENSOR CAN BE OVERRIDDEN BY SWITCHES.

41. ALL CONDUITS FOR TELEPHONE AND DATA OUTLETS SHALL BE 1.25" UNLESS NOTED OTHERWISE. ALL BACKBOXES FOR TELEPHONE AND DATA OUTLETS SHALL BE 2 GANG AND SHALL BE MINIMUM OF 2.75" DEEP.

42. THE SIGNAL SYSTEMS SUCH AS SECURITY, TELEPHONE AND DATA SHALL BE FURNISHED AND INSTALLED BY OWNER. ALL EQUIPMENT, DEVICES, JACKS, CABLES, ETC. SHALL BE PROVIDED BY OWNER. THIS CONTRACTOR SHALL PROVIDE ALL BACKBOXES, RACEWAY SYSTEM AND POWER FOR THESE SYSTEMS. THE SPECIAL BACKBOXES FOR THESE SYSTEMS SHALL BE FURNISHED BY OWNER AND INSTALLED BY THIS CONTRACTOR. PROVIDE MINIMUM OF 3/4" CONDUIT FOR EACH OUTLET FOR THESE SYSTEMS AND TERMINATE INTO NEAREST ACCESSIBLE CEILING SPACE. COORDINATE ALL REQUIREMENTS WITH SYSTEM MANUFACTURER.

43. THE CONTRACTOR MUST VISIT THE SITE TO FAMILIARIZE HIMSELF WITH THE EXISTING SITE AND BUILDING CONDITIONS WHICH WILL BE AFFECTED DURING CONSTRUCTION PRIOR TO SUBMITTING HIS BID PROPOSAL. CONTRACTOR IS CAUTIONED THAT THE PROJECT IS A REMODELING JOB AND IT IS ASSUMED THAT HE HAS INCLUDED FUNDS IN HIS BID TO COVER UNFORESEEN ITEMS WHICH MUST BE MOVED, RELOCATED OR ADJUSTED TO FIT HIS WORK. NO EXTRA COMPENSATION WILL BE ALLOWED FOR ANY EXTRA WORK CAUSED BY FAILURE TO VISIT, EXAMINE OR VERIFY.

44. ALL EXISTING EQUIPMENT IS TO REMAIN OPERATIONAL DURING CONSTRUCTION PERIOD. ALL TEMPORARY WIRING OR REROUTING OF CIRCUITRY TO ACHIEVE THIS IS BY THE ELECTRICAL CONTRACTOR. SHUTDOWN OF EXISTING SERVICES SHALL ONLY BE PERMITTED UPON WRITTEN APPROVAL FROM THE OWNER AND THEN ONLY FOR THAT DATE AND DURATION AGREED UPON. INCLUDE ALL PREMIUM TIME CHARGES IN THE BASE BID.

45. EXISTING CONDUITS IN GOOD CONDITION MAY BE REUSED WHERE POSSIBLE. PULL NEW WIRE AS REQUIRED. ALL UNUSED CONDUIT, WIRE, JUNCTION BOXES, ETC. WILL BE REMOVED. ALL JUNCTION BOXES MUST HAVE COVERS. VERIFY REQUIREMENTS IN FIELD.

46. FOR THE AREA TO BE DEMOLISHED, THE DEMOLITION OF LIGHT FIXTURES, OUTLETS OR ANY OTHER ELECTRICAL EQUIPMENT/DEVICES SHALL BE PERFORMED AS REQUIRED. SEE ARCHITECTURAL DRAWINGS AND THE RESPECTIVE FLOOR PLANS IN ELECTRICAL DRAWINGS FOR DEMOLITION. ELECTRICAL CONTRACTOR SHALL REMOVE ALL ASSOCIATED RACEWAYS AND WIRING AS REQUIRED. ELECTRICAL CONTRACTOR SHALL DE-ENERGIZE AND DISCONNECT APPLICABLE WIRING TO FACILITATE SAFE DEMOLITION.

47. THE EXISTING EQUIPMENT IS SHOWN BASED UPON THE INFORMATION OBTAINED THROUGH BRIEF SURVEY OF THE FACILITY. CONTRACTOR IS TO SURVEY THE EXISTING FACILITY IN ORDER TO DETERMINE THE FULL EXTENT OF WORK AND BE COMPLETELY FAMILIAR WITH ALL THE EXISTING CONDITIONS INCLUDING PLUMBING, HVAC, ELECTRICAL, ETC. THE ARCHITECT/ENGINEER AND OWNER ASSUME NO RESPONSIBILITY IN RESPECT TO THE ACCURACY OF SUCH INFORMATION SHOWN ON THE DRAWINGS. CONTRACTOR SHALL MAKE ADEQUATE ALLOWANCE IN HIS BID FOR SOME DEVIATIONS TO SUCH INFORMATION.

48. WHERE EXISTING CONDITIONS PREVENT PROPER INSTALLATION OF PROPOSED WORK, REROUTE, EXTEND OR ALTER EXISTING WORK SO AS TO ACCOMMODATE PROPOSED WORK REQUIREMENTS.

49. WHERE EXISTING WIRING DEVICE (SUCH AS RECEPTACLE, SWITCH, ETC.) IS INDICATED TO REMAIN, REUSE EXISTING JUNCTION BOX, RACEWAY, BUT PROVIDE NEW DEVICE AND ASSOCIATED COVERPLATE. RECONNECT THIS DEVICE TO NEW CIRCUIT AS INDICATED.

50. WHERE A NEW WALL IS TO BE BUILT PERPENDICULAR TO EXISTING WALL AND IF THERE IS AN INTERFERING EXISTING RECEPTACLE ON THE EXISTING WALL, RELOCATE THIS RECEPTACLE AS REQUIRED.

51. AS REQUIRED EXTEND EXISTING RECEPTACLES WHERE EXISTING WALLS ARE FURRED OUT. REFER TO ARCHITECTURAL DRAWINGS FOR EXTENT OF THIS WORK.

52. IN ORDER TO FACILITATE THE REPLACEMENT OF EXISTING OR INSTALLATION OF NEW DUCTWORK AND/OR PIPING, REMOVE EXISTING LIGHTING FIXTURE AND/OR SMOKE /HEAT DETECTORS AS REQUIRED, WHETHER SHOWN ON DRAWINGS OR NOT. THIS NOTE IS GENERALLY APPLICABLE, BUT NOT LIMITED TO, WHERE THERE IS NO DROPPED CEILING (IN EXPOSED CEILING AREA). ONCE THE INSTALLATION OF DUCTWORK, PIPING ETC IS COMPLETED, REINSTALL ELECTRICAL EQUIPMENT/DEVICES. PROVIDE ADEQUATE ALLOWANCE IN THE BID FOR THIS WORK.

53. ELECTRICAL CONTRACTOR SHALL VERIFY SIZE OF ALL EXISTING OPENINGS, DOORS, ETC., FOR REMOVING EQUIPMENT AND MATERIAL OUT OF BUILDING. ELECTRICAL CONTRACTOR SHALL PROVIDE ANY NEW OR ENLARGED OPENINGS IN EXISTING BUILDING CONSTRUCTION REQUIRED TO FACILITATE EXITING OF HIS EQUIPMENT/MATERIAL AND RESTORE SUCH OPENINGS TO THEIR ORIGINAL STATE AFTER COMPLETION.

54. THE ELECTRICAL DRAWINGS SHOW DIRECT PRINCIPLE WORK WHICH MUST BE ACCOMPLISHED UNDER THIS CONTRACT. INDIRECT AND INCIDENTAL WORK WILL ALSO BE NECESSARY DUE TO CHANGES AFFECTING EXISTING ARCHITECTURAL, MECHANICAL, PLUMBING OR OTHER SYSTEMS. SUCH INCIDENTAL WORK IS ALSO PART OF THIS CONTRACT. INSPECT THOSE AREA, AND ASCERTAIN WORK NEEDED AND DO THAT WORK IN ACCORDANCE WITH THE CONTRACT REQUIREMENTS, AT NO ADDITIONAL COST.

55. PROVIDE PHONE CONNECTION AT FIRE ALARM CONTROL PANEL FOR DIALING OUT WHETHER SPECIFICALLY INDICATED OR NOT.

56. ALL CIRCUIT BREAKERS FOR PANEL BOARDS SHALL BE THE BOLT-ON TYPE, RATED FOR SWITCHING DUTY AND RATED FOR THE AVAILABLE FAULT CURRENT WITH MINIMUM RATING OF 10,000 AIC FOR 120/208V PANELS.

57. ALL CIRCUIT BREAKER SIZES AND QUANTITIES INDICATED ON SCHEDULE(S) ARE FOR THE CONVENIENCE OF THE BIDDERS ONLY. THE ELECTRICAL CONTRACTOR SHALL BE RESPONSIBLE FOR VERIFYING AND SUPPLYING ALL REQUIRED BRANCH BREAKERS.

Larson & Darby Group
Architects Engineers Planners
Rockford Office - 4949 Harrison Ave., Suite 100, P.O.Box 5307 Rockford, IL 61125 Tel (815) 484-0799 Fax (815) 229-9667

CITY OF ROCKFORD
120 N 3RD STREET
ROCKFORD, ILLINOIS

COPYRIGHT 2014
All drawn and written information appearing herein shall not be duplicated, disclosed, or otherwise used without the written consent of Larson & Darby Group

ISSUED FOR:	DATE
ISSUED FOR CONSTRUCTION	06-26-14

DRAWN	APPROVED
CRF	KBO

DATE: 06-26-2014
PROJECT NUMBER 24043
SHEET NUMBER E4.0

PLOTTED BY: RUBEN DELAVENTE DATE PLOTTED: 6/30/2014 10:24 AM FILE PATH AND NAME: P:\037-A-2 Rockford Wellness Center Mech-Elec Design\E\037a2-E40

LIGHTING

SYMBOL	DESCRIPTION
	2'x4' FLUORESCENT LTG. FIXTURE
	1'x4' FLUORESCENT LTG. FIXTURE
	1'x8' FLUORESCENT LTG. FIXTURE
	2'x2' FLUORESCENT LTG. FIXTURE
	DOWN LIGHT FIXTURE
	DOWN LIGHT FIXTURE
	WALL WASHER, CEILING MTD. LTG. FIXTURE
	WALL MOUNTED LTG. FIXTURE
	WALL MOUNTED LTG. FIXTURE
	2' WALL MOUNTED FLUORESCENT LTG. FIXTURE
	4' WALL MOUNTED FLUORESCENT LTG. FIXTURE
	TRACK LTG. FIXTURE
	4' STRIP LTG. FIXTURE
	8' STRIP LTG. FIXTURE
	24",36",42" FIXTURE UNDERCABINET
RW	DARKROOM SAFELIGHT FIXTURE
PS	PHOTO CELL
LR	LIGHTING RELAY
	42" HIGH BOLLARD
	FLOOD LIGHT
	EXTERIOR, POLE MOUNTED SINGLE LTG. FIXTURE
	EXTERIOR, POLE MOUNTED DOUBLE LTG. FIXTURE
	EXTERIOR, POLE MOUNTED TRIPLE LTG. FIXTURE
	EXTERIOR, POLE MOUNTED QUAD LTG. FIXTURE

EMERGENCY LIGHTING

SYMBOL	DESCRIPTION
	2'x4' FLUORESCENT LTG. FIXTURE
	1'x4' FLUORESCENT LTG. FIXTURE
	1'x8' FLUORESCENT LTG. FIXTURE
	2'x2' FLUORESCENT LTG. FIXTURE
	DOWN LIGHT FIXTURE
	DOWN LIGHT FIXTURE
	DOWN LIGHT FIXTURE
	DOWN LIGHT FIXTURE
	2' WALL MOUNTED FLUORESCENT LTG. FIXTURE
	4' WALL MOUNTED FLUORESCENT LTG. FIXTURE
	4' STRIP LTG. FIXTURE
	8' STRIP LTG. FIXTURE
	TWO-LAMP WALL MOUNTED EMERGENCY FIXTURE
	TWO-LAMP CEILING MOUNTED EMERGENCY FIXTURE
	ONE-LAMP CEILING MOUNTED EMERGENCY FIXTURE
	SINGLE REMOTE BATTERY OPERATED LAMP
	TWIN REMOTE BATTERY OPERATED LAMPS

MOTORS

SYMBOL	DESCRIPTION
	MOTOR
T OR T	FRACTIONAL HORSEPOWER MOTOR TOGGLE DISCONNECT SWITCH WITH THERMAL OVERLOAD RELAY
	MOTOR W/ DISCONNECT
	MOTOR W/ COMBO MOTOR STARTER & NON-FUSED DISCONNECT SWITCH

EXIT LIGHTING (3)

SYMBOL	DESCRIPTION
	EXIT SIGN
	DOUBLE FACE EXIT SIGN
	SINGLE FACE EXIT SIGN WITH DIRECTIONAL ARROW
	SINGLE FACE EXIT SIGN WITH DIRECTIONAL ARROW
	SINGLE FACE EXIT SIGN WITH DIRECTIONAL ARROWS
	DOUBLE FACE EXIT SIGN WITH DIRECTIONAL ARROWS
	DOUBLE FACE EXIT SIGN WITH DIRECTIONAL ARROWS

SWITCHES

SYMBOL	DESCRIPTION
$	SINGLE POLE SWITCH
$K	KEY OPERATED SWITCH
$2	DOUBLE POLE SWITCH
$3W	THREE WAY SWITCH
$4W	FOUR WAY SWITCH
$T	THERMAL OVERLOAD SWITCH
$P	SINGLE POLE SWITCH W/ PILOT LITE
$D	DIMMER SWITCH
$ST	SWITCH W/ INTEGRAL TIMER (7)
$W	WIRE MOLD FITTING SWITCH
$F	FUSIBLE DISCONNECT SWITCH
$MC	MOMENTARY CONTACT SWITCH
	REMOTE LIGHT W/ KEY TEST SWITCH
OS	OCCUPANCY SENSOR
	EMERGENCY POWER OFF-PUSH-BUTTON

FIRE ALARM

SYMBOL	DESCRIPTION
H	DOOR MTD. MAGNETIC HOLD OPEN DEVICE
FCP	FIRE ALARM CONTROL PANEL
FAA	FIRE ALARM ANNUNCIATOR PANEL
S	MANUAL PULL STATION
AV	WALL MOUNTED AUDIO/VISUAL DEVICE
PS	PRE-SIGNAL CHIME W/ VISUAL SIGNAL
D	CEILING MTD. HEAT DETECTOR
SD	CEILING MOUNTED SMOKE DETECTOR
WF	WATER FLOW SWITCH
VSS	VALVE SUPERVISORY SWITCH
DC	DOOR CLOSURE
RA	REMOTE INDICATOR LAMP
V	VISUAL DEVICE
DD	DUCT MOUNTED SMOKE DETECTOR (1)
D FT	CEILING MOUNTED FIXED TEMPERATURE HEAT DETECTOR
R	FAN SHUTDOWN RELAY
KB	KNOX BOX
A	AUDIO DEVICE

POWER EQUIPMENT

SYMBOL	DESCRIPTION
ECB	ENCLOSED CIRCUIT BREAKER
CB	BUS DUCT END CABLE TAP BOX
F	BUS PLUG FUSIBLE DISCONNECT SWITCH
C	BUS PLUG CIRCUIT BREAKER
	BRANCH CIRCUIT PANEL BOARD
	DISTRIBUTION PANEL BOARD
	TWO BUTTON START-STOP CONTROL BOX
	THREE BUTTON START-STOP CONTROL BOX
	CEILING MOUNTED JUNCTION BOX
	WALL MOUNTED JUNCTION BOX
	JUNCTION BOX W/ FLEXIBLE CONDUIT
T OR T	TOGGLE DISCONNECT SWITCH WITH THERMAL OVERLOAD RELAY
T OR T	TOGGLE DISCONNECT SWITCH WITH THERMAL OVERLOAD RELAY AND FLEXIBLE CONDUIT
TPP	TELECOMMUNICATIONS POWER POLE
B	PROGRAM SYSTEM BELL
M	UTILITY METER
	PUSH BUTTON - ELECTRIC DOOR STRIKE
B	DOOR BUZZER
C	DOOR CHIME
DB	DOOR BELL
TC	TIME CLOCK
C	CONTACTOR
	NON-FUSED DISCONNECT SWITCH
F	FUSED DISCONNECT SWITCH
	COMBO MOTOR STARTER WITH NON-FUSED DISCONNECT SWITCH
	COMBO MOTOR STARTER WITH FUSED DISCONNECT SWITCH
	MAGNETIC MOTOR STARTER
T	TRANSFORMER
H	HAIR DRYER
H	HAND DRYER
	FLEXIBLE CONNECTION TO EQUIPMENT
A	AUTOMATIC TRANSFER SWITCH
PP	PUSH PLATE
	GROUNDING
	BRANCH CIRCUIT WIRING. LINE WITH DOT INDICATES GROUND WIRE.
A	AUDIO/VISUAL ALARM FOR EYEWASH
AC	OUTLET BOX FOR AUDIO-VIDEO CONTROLS (6)
GV	GAS SOLENOID VALVE
GR	GAS VALVE RELAY PANEL
GB	GAS SHUT-OFF BUTTON

ABBREVIATION LIST

AF	DENOTES AMPERE FUSE.
AFF	DENOTES ABOVE FINISHED FLOOR.
AFG	DENOTES ABOVE FINISHED GRADE.
AT	DENOTES AMPERE TRIP.
ATS	DENOTES AUTOMATIC TRANSFER SWITCH.
C/B	DENOTES CIRCUIT BREAKER.
CCT	DENOTES CIRCUIT.
COM ED	DENOTES COMMONWEALTH EDISON COMPANY.
C/T	DENOTES CURRENT TRANSFORMER.
CU	DENOTES COPPER.
EC	DENOTES ELECTRICAL CONTRACTOR.
EM	DENOTES DEVICE ON EMERGENCY POWER
FPC	DENOTES FIRE PROTECTION SYSTEM CONTRACTOR..
GC	DENOTES GENERAL CONTRACTOR.
GFCI	DENOTES GROUND FAULT CIRCUIT INTERRUPTER
GRD	DENOTES GROUND.
KWH	DENOTES KILOWATT HOUR.
MC	DENOTES MECHANICAL CONTRACTOR.
MCC	DENOTES MOTOR CONTROL CENTER.
MTS	DENOTES MANUAL TRANSFER SWITCH.
NL	DENOTES LIGHT FIXTURE CONNECTED TO A NIGHT LIGHT BRANCH CIRCUIT. PROVIDE CIRCUIT BREAKER LOCK-ON DEVICE.
PC	DENOTES PLUMBING CONTRACTOR.
P/T	DENOTES POTENTIAL TRANSFORMER.
TVSS	DENOTES TRANSIENT VOLTAGE SURGE SUPPRESSION.
UON	DENOTES UNLESS OTHERWISE NOTED
VIF	DENOTES VERIFY IN FIELD. (2)
WP	DENOTES EQUIPMENT IN A WEATHERPROOF ENCLOSURE.
XP	DENOTES EXPLOSION PROOF DEVICE OR EQUIPMENT.

RECEPTACLES

WALL MOUNTED	FLUSH IN FLOOR	ABOVE FLOOR OR POKE-THRU	CEILING MOUNTED	ABOVE COUNTER	DESCRIPTION
					NORMAL DUPLEX RECEPTACLE
					NORMAL FOURPLEX RECEPTACLE
					DUPLEX ISOLATED GROUND RECEPTACLE
					FOURPLEX ISOLATED GROUND RECEPTACLE
					DUPLEX RECEPTACLE FOR CRITICAL DISTRIBUTION SYSTEM
					FOURPLEX RECEPTACLE FOR CRITICAL DISTRIBUTION SYSTEM
					DUPLEX RECEPTACLE WITH GROUND FAULT CIRCUIT INTERRUPTER FEATURE
					SWITCHED DUPLEX RECEPTACLE
					SIMPLEX RECEPTACLE
TV	TV	TV		N/A	TV OUTLET
TV	TV	TV		N/A	TV OUTLET AND DUPLEX RECEPTACLE

MISCELLANEOUS:

	SPECIAL WALL MOUNTED RECEPTACLE
CR	FOUR CEILING MOUNTED RETRACTABLE RECEPTACLES
TR	DUPLEX RECEPTACLE, TAMPER RESISTANT

TELEPHONE and DATA (5)

WALL MOUNTED	FLUSH IN FLOOR	ABOVE FLOOR OR POKE-THRU	CEILING MOUNTED	ABOVE COUNTER	DESCRIPTION
					TELEPHONE OUTLET
					DATA OUTLET
					COMBINATION PHONE AND DATA OUTLET

SUBSCRIPT INDICATES THE FOLLOWING FOR WALL MOUNTED OUTLETS (UNO):

H	HANDICAPPED PAY PHONE OUTLET
P	PAY PHONE OUTLET
W	WALL MOUNTED TELEPHONE OUTLET

OAS,LLC
O'HIGGINS AND ARNOLD SUSTAINABILITY, LLC
769 HEARTLAND DR., UNIT A SUGAR GROVE, ILLINOIS 60554

Larson & Darby Group
Architects Engineers Planners
Rockford Office - 4949 Harrison Ave., Suite 300, P.O.Box 5207 Rockford, IL 61125 Tel (815) 484-0799 Fax (815) 229-9607

CITY OF ROCKFORD
120 N 3RD STREET
ROCKFORD, ILLINOIS

COPYRIGHT 2014
All drawn and written information appearing herein shall not be duplicated, disclosed, or otherwise used without the written consent of Larson & Darby Group

ISSUED FOR:	DATE
ISSUED FOR CONSTRUCTION	06-20-14

DRAWN	APPROVED
CRF	KBO

DATE: 06-26-2014
PROJECT NUMBER 24043
SHEET NUMBER E4.1

PLOTTED BY: RUBEN DEAJUENTE DATE PLOTTED: 6/30/2014 10:24 AM FILE PATH AND NAME: P:\037-A-2 Rockford Wellness Center Mech-Elec Design\E\037a2-E41

DIVISION 26 00 00 – ELECTRICAL

PART 1 – GENERAL

A. REQUIREMENTS

1. PRODUCTS AND EXECUTION SHALL BE PROVIDED FOR A COMPLETE AND FULLY OPERATIONAL ELECTRICAL SYSTEM THROUGHOUT THE EXTENT OF THE PROJECT, IN CONFORMANCE WITH APPLICABLE CODES, LAWS, ORDINANCES AND AGENCY STANDARDS OF GOVERNING BODIES HAVING JURISDICTION, AND IN STRICT ACCORDANCE WITH THE CONTRACT DOCUMENTS, AND BUILDING STANDARDS.

2. PRODUCTS, INCLUDING EQUIPMENT, DEVICES, FIXTURES, AND MATERIALS SHALL BE NEW UNLESS NOTED OTHERWISE, UL LISTED, AND BEAR APPROPRIATE LABEL.

3. EXECUTION, INCLUDING PREPARATION, INSTALLATION, STARTING, AND TESTING SHALL BE PERFORMED BY SKILLED TRADES PERSONNEL, IN COMPLIANCE WITH THE ASSOCIATED MANUFACTURERS RECOMMENDATIONS, AND COORDINATED WITH THE OTHER CONSTRUCTION TRADES.

B. APPLICABLE CODES – SELECT ONE OF THE FOLLOWING GROUPS

1. IMC – 2009
2. IECC – 2012
3. NEC – 2008

C. APPLICABLE LAWS AND AGENCY STANDARDS

1.	AMERICAN NATIONAL STANDARDS INSTITUTE	ANSI
2.	AMERICAN SOCIETY FOR TESTING AND MATERIALS	ASTM
3.	AMERICANS WITH DISABILITIES ACT	ADA
4.	ELECTRICAL TESTING LABORATORIES	ETL
5.	ELECTRONIC/TELECOMMUNICATIONS INDUSTRIES ASSOCIATION	EIA/TIA
6.	ILLUMINATING ENGINEERING SOCIETY OF NORTH AMERICA	IESNA
7.	NATIONAL ELECTRICAL MANUFACTURERS ASSOCIATION	NEMA
8.	NATIONAL FIRE PROTECTION ASSOCIATION	NFPA
9.	UNDERWRITERS' LABORATORIES	UL

D. APPROVALS

1. EMERGENCY AND EXIT LIGHTING DOCUMENTS SHALL BE PREPARED AND SUBMITTED TO THE LOCAL FIRE DEPARTMENT FOR THEIR APPROVAL OF SYSTEM LAYOUT, CIRCUITING, AND FIXTURE TYPE. APPROVED DRAWINGS SHALL BE SUBMITTED FOR REVIEW PRIOR TO CONSTRUCTION.

2. FIRE ALARM AND LIFE SAFETY DOCUMENTS SHALL BE PREPARED AND SUBMITTED TO THE LOCAL FIRE DEPARTMENT FOR THEIR APPROVAL OF SYSTEM EXPANSION, LAYOUT, CIRCUITING, EQUIPMENT AND DEVICE TYPE. THE BASE BUILDING FIRE ALARM AND LIFE SAFETY SYSTEM MANUFACTURER/INSTALLER SHALL BE RETAINED TO PRODUCE OR UPDATE THE BUILDING FIRE ALARM AND LIFE SAFETY DOCUMENTS, AND TO MAKE FINAL CONNECTIONS AND ALTERATIONS TO THE EXISTING SYSTEM. APPROVED DRAWINGS SHALL BE SUBMITTED FOR REVIEW PRIOR TO CONSTRUCTION.

E. SUBMITTALS

1. PRODUCT DATA SHALL BE PREPARED AND SUBMITTED FOR REVIEW PRIOR TO CONSTRUCTION FOR THE FOLLOWING PRODUCTS: RACEWAY COMPONENTS, WIRE, FUSES, CIRCUIT BREAKERS, RECEPTACLES, TOGGLE SWITCHES, DISCONNECT SWITCHES, MOTOR STARTERS, CONTACTORS, LIGHTING FIXTURES, BALLASTS, LAMPS, CONTROLS, FIRE ALARM DEVICES, LIFE SAFETY DEVICES.

2. SHOP DRAWINGS SHALL BE PREPARED AND SUBMITTED FOR REVIEW PRIOR TO CONSTRUCTION FOR THE FOLLOWING PRODUCTS: BRANCH PANELBOARDS, FIRE ALARM EQUIPMENT, AND LIFE SAFETY EQUIPMENT.

3. TEST RESULTS SHALL BE PREPARED AND SUBMITTED PRIOR TO PROJECT COMPLETION FOR CABLE INSULATION, GROUNDING SYSTEM, EMERGENCY SYSTEM, FIRE ALARM SYSTEM, AND LIFE SAFETY SYSTEMS IN ACCORDANCE WITH AUTHORITIES HAVING JURISDICTION, AND APPLICABLE CODES AND AGENCY STANDARDS.

4. MANUFACTURERS INSTRUCTIONS SHALL BE PREPARED AND SUBMITTED PRIOR TO CONSTRUCTION INCLUDING INSTALLATION MANUALS AND APPLICATION CONDITIONS AND LIMITATIONS FOR ELECTRICAL APPARATUS USE, STORAGE, HANDLING, PROTECTION, EXAMINATION, PREPARATION, INSTALLATION, AND STARTING.

6. PROJECT RECORD DOCUMENTS SHALL BE PREPARED USING AUTOCAD OR EQUIVALENT CAD PACKAGE. PROJECT RECORD DOCUMENTS SHALL BE SUBMITTED ON REPRODUCIBLE MEDIA AND ON DISKETTE PRIOR TO PROJECT COMPLETION FOR ELECTRICAL SYSTEMS. RECORD ACTUAL LOCATION OF EQUIPMENT, DEVICES, FIXTURES, ETC. RECORD ACTUAL ROUTING OF OVERHEAD FEEDERS.

F. COORDINATION

2. NOTIFY THE ENGINEER OF ANY CONFLICTING DESIGN INFORMATION OR ANY DESIGN INTENTIONS WHICH ARE NOT READILY INTERPRETED FROM THE CONTRACT DOCUMENTS PRIOR TO ANY PRODUCT SELECTION OR EXECUTION OF WORK. NOTIFY THE ENGINEER OF ANY PRODUCTS WHICH ARE DAMAGED, UNSUITABLE, INCOMPATIBLE, OR NON-COMPLIANT WITH ANY APPLICABLE CODES OR ORDINANCES OF ANY GOVERNING BODIES HAVING LAWFUL JURISDICTION.

3. COORDINATE CONSTRUCTION OF THE ELECTRICAL SYSTEM WITH THE ARCHITECT. FINAL LOCATIONS AND MOUNTING HEIGHTS OF ELECTRICAL EQUIPMENT, FIRE ALARM EQUIPMENT, RECEPTACLES, SWITCHES, COMMUNICATION DEVICES, FIRE ALARM DEVICES, LIGHTING FIXTURES, ETC. SHALL BE AS DIRECTED BY THE ARCHITECT.

4. CONSTRUCTION TRADES: COORDINATE WORK WITH OTHER CONSTRUCTION TRADES.

5. BUILDING MANAGEMENT: MEET ON SITE WITH THE BUILDING OWNER TO BECOME FAMILIAR WITH BUILDING STANDARDS. NORMAL BUILDING WORKING HOURS SHALL BE RECOGNIZED. AFTER-HOURS WORK OR TEMPORARY SERVICES SHALL BE WITH PRIOR WRITTEN APPROVAL FROM BUILDING MANAGEMENT. ENCLOSE CONSTRUCTION AREA FROM OTHER AREAS TO PREVENT TRANSMISSION OF DUST, DIRT, AND NOISE INTO OTHER EXISTING TENANT AREAS. PRODUCT AND WASTE TRANSFER SHALL BE COORDINATED WITH BUILDING MANAGEMENT FOR SCHEDULING OF THE ELEVATORS, DELIVERIES, AND WASTE REMOVAL.

6. EXISTING BUILDING SYSTEMS: REVIEW BUILDING STANDARDS WITH THE BUILDING ENGINEER. PERFORM A SITE VISIT TO VERIFY THE EXISTING SITE CONDITIONS. COSTS ASSOCIATED WITH UNFORESEEN CONDITIONS AS RESULT OF NOT PERFORMING A SITE VISIT SHALL NOT BE AN ENTITLEMENT FOR AN INCREASE TO THE CONTRACT. CONSTRUCTION SHALL BE PERFORMED WITHOUT INTERRUPTION TO THE BUILDING INTERFERENCE TO COMMON AREAS, CORRIDORS, EXITS OR EXISTING TENANTS. WHERE ANY CONSTRUCTION WOULD INTERFERE WITH THE DAILY OPERATIONS OF THE BUILDING OR OTHER TENANTS, AFTER-HOURS WORK OR TEMPORARY SERVICES SHALL BE PROVIDED AT NO INCREASE TO THE CONTRACT.

H. WARRANTEE AND GUARANTEE

1. PROVIDE WARRANTEE AND MANUFACTURERS CERTIFICATE FOR EACH PRODUCT, MINIMUM OF ONE YEAR OR LONGER AS SPECIFIED, FROM THE DATE OF OCCUPANCY. REPAIR AND/OR REPLACE ANY EQUIPMENT, DEVICES, FIXTURES, MATERIALS, ETC. WITH DEFECT AS REQUIRED AT NO INCREASE TO THE CONTRACT.

2. PROVIDE GUARANTEE OF INSTALLATION FOR A PERIOD OF ONE YEAR FROM THE DATE OF OCCUPANCY. REPAIR AND/OR REINSTALL ANY WORK WITH DEFECT AS REQUIRED AT NO INCREASE TO THE CONTRACT. PROVIDE GUARANTEE OF REWORK FOR A PERIOD OF ONE YEAR FROM THE COMPLETION OF REPAIR OR REINSTALLATION.

3. DAMAGE CAUSED TO FINISHES, SURFACES, CEILING TILES, EQUIPMENT, ETC. SHALL BE REPAIRED AND/OR REPLACED TO MATCH THE PRE-EXISTING CONDITION AT NO INCREASE TO THE CONTRACT.

I. PAY FEES AND OTHER CHARGES INCIDENTAL TO THE ELECTRICAL WORK AND OBTAIN AND PAY FOR REQUIRED LIABILITY AND CASUALTY INSURANCE, PERMITS, LICENSES, INSPECTIONS, TAXES, ETC.

J. CONSTRUCTION SHALL BE DONE DURING REGULAR WORKING HOURS AND DAYS, UNLESS OTHERWISE SPECIFIED. WORK REQUIRED TO BE PERFORMED DURING OVERTIME HOURS OR DAYS SHALL BE AS INDICATED.

K. SUBSTITUTIONS ARE NOT ACCEPTABLE.

PART 2 – PRODUCTS

A. CABINETS, ENCLOSURES AND ACCESS PANELS SHALL BE CODE GAGE STEEL WITH BAKED ENAMEL FINISH AND FLANGELESS HINGES AND FASTENERS.

B. CONDUITS SHALL BE HOT-DIPPED GALVANIZED OR ELECTRO-GALVANIZED STEEL, MINIMUM SIZE SHALL BE 3/4 INCH, EXCEPT POWER BRANCH CIRCUITS MAY BE 1/2 INCH (UNLESS NOTED OTHERWISE) AND FLEXIBLE CONNECTIONS TO RECESSED LIGHTING FIXTURES WHICH MAY BE 3/8 INCH. FLEXIBLE STEEL CONDUIT SHALL BE GALVANIZED STEEL, WITH UL LISTED LIQUID TIGHT JACKET AS REQUIRED, FOR FINAL CONNECTIONS TO MOTORS, RECESSED LIGHTING FIXTURES, AND LIFE SAFETY DEVICES. SUPPORTS, INCLUDING CHANNELS, ANGLES, RODS, AND FASTENERS SHALL BE HOT-DIPPED GALVANIZED STEEL. MANUFACTURER SHALL BE ALLIED, LTV/REPUBLIC, STEELDUCT, OR WHEATLAND.

C. CONDUIT FITTINGS SHALL BE STEEL, DIE CAST FITTINGS OF POT METAL ARE NOT ACCEPTABLE. ELECTRICAL METALLIC TUBING (EMT) FITTINGS SHALL BE COMPRESSION TYPE WITH INSULATED THROATS; SET SCREW FITTINGS ARE NOT ACCEPTABLE. INTERMEDIATE METAL CONDUIT (IMC) AND HEAVY WALL CONDUIT (HWG) FITTINGS SHALL BE THREADED JOINTS; SET SCREW AND COMPRESSION FITTINGS ARE NOT ACCEPTABLE. MANUFACTURER SHALL BE APPLETON, CROUSE HINDS/MIDWEST, OZ/GEDNEY, RACO, STEEL CITY, OR T&B.

D. OUTLET BOXES FOR ALL TOGGLE SWITCHES, RECEPTACLES, COMMUNICATION DEVICES, FIRE ALARM DEVICES, AND LIFE SAFETY DEVICES SHALL INCLUDE PLASTER RINGS, DEVICE PLATES, AND COVER PLATES WHERE REQUIRED. PROVIDE BOXES SUITABLE FOR PLENUM, WET, OR HAZARDOUS LOCATIONS AS REQUIRED. DEVICE COVER PLATES SHALL BE STAINLESS STEEL PAINTED TO MATCH FINISH. MULTI-GANG OUTLET BOXES SHALL INCLUDE SUITABLE ONE-PIECE DEVICE COVER PLATE. OUTLETS LOCATED ON OPPOSITE SIDES OF A PARTITION SHALL BE STAGGERED BY 12 INCHES, MINIMUM. MANUFACTURER SHALL BE APPLETON, RACO, OR STEEL CITY.

E. RACEWAY FOR POWER AND COMMUNICATIONS SHALL BE TWO COMPARTMENT STEEL, LENGTH AND FINISH AS REQUIRED, COMPLETE WITH ALL BASES, ADJUSTABLE STANCHIONS, HORIZONTAL SUPPORTS, TRIM PLATES, AND CONNECTING HARNESSES. MANUFACTURER SHALL BE WIREMOLD.

F. SURFACE METAL RACEWAY INCLUDING POWER DEVICES, COMMUNICATION DEVICES, FITTINGS, CONNECTORS, FEEDS, ELBOWS, COUPLINGS, BLANKS, TEES, WIRE CLIPS, DEVICE BRACKETS, DEVICE COVERS, AND OTHER ASSOCIATED APPARATUS SHALL BE SIZED TO FACILITATE PULLING THE QUANTITY AND SIZE OF WIRES AND CABLES, AND INSTALLING THE DEVICES CONTAINED. RACEWAY SHALL BE CODE GAGE GALVANIZED STEEL, SHALL INCLUDE MOUNTING KNOCK-OUTS, AND SHALL BE FINISHED AS DIRECTED BY THE ARCHITECT. MANUFACTURER SHALL BE WIREMOLD.

G. WIRE SHALL BE 600 VOLT INSULATED COPPER, MINIMUM SIZE SHALL BE AWG #12, WIRE SIZES AWG #8 AND LARGER SHALL BE STRANDED. MANUFACTURER SHALL BE AMERICAN INSULATED WIRE CORP., CERRO, COLLYER, CAPITAL WIRE AND CABLE, OKONITE, SENETOR, SOUTH WIRE, OR TRIANGLE.

H. CABLE SUPPORTS SHALL BE APPROPRIATE FOR THE SIZE OF CONDUIT AND TYPE OF WIRE AND CABLES. CABLE LUBRICANT SHALL BE LESS THAN SIX PERCENT SOLID RESIDUE AFTER DRYING AND SHALL NOT CONTAIN ANY WAXES, GREASES, SILICONES, OR GLYCOL OILS.

I. LOCAL DISCONNECT SWITCHES FOR ELECTRICALLY OPERATED EQUIPMENT SHALL BE HEAVY DUTY WITHIN ENCLOSURE SUITABLE FOR THE LOCATION. FUSIBLE DISCONNECT SWITCHES 800 AMPS AND LARGER SHALL BE BOLTED PRESSURE, LOAD-BREAK TYPE. FUSIBLE AND NON-FUSIBLE DISCONNECT SWITCHES 600 AMPS AND SMALLER SHALL BE QUICK-MAKE, QUICK-BREAK TYPE. MANUFACTURER SHALL BE CUTLER HAMMER, SIEMENS/ITE, OR SQUARE D.

J. OVERCURRENT AND SHORT CIRCUIT PROTECTION WITHIN FUSIBLE SWITCHES SHALL BE CLASS L CURRENT LIMITING TIME DELAY FUSES FOR SWITCHES RATED 800 AMPS AND LARGER, AND CLASS RK-1 CURRENT LIMITING TIME DELAY FUSES FOR SWITCHES RATED 600 AMPS AND SMALLER. MANUFACTURER SHALL BE BUSSMANN.

K. GROUNDING SYSTEM, INCLUDING SERVICE AND EQUIPMENT GROUNDING AND BONDING, SHALL BE IN ACCORDANCE WITH CODE AND SHALL CONNECT ALL ELECTRICALLY OPERATED EQUIPMENT. PROVIDE A SEPARATE GREEN GROUND WIRE FOR EACH BRANCH CIRCUIT AND FEEDER.

L. RECEPTACLES SHALL BE DUPLEX NEMA 5-20R, BACK AND SIDE WIRED, SPECIFICATION GRADE, UNLESS NOTED OTHERWISE. SPECIAL RECEPTACLE CONFIGURATIONS, DUPLEX ISOLATED GROUND RECEPTACLES, DUPLEX GROUND FAULT INTERRUPTER RECEPTACLES, AND ARC FAULT INTERRUPTER RECEPTACLES SHALL BE AS REQUIRED OR AS INDICATED ON THE CONTRACT DOCUMENTS. GENERAL RECEPTACLE COLOR SHALL BE WHITE AND IG RECEPTACLE COLOR SHALL BE ORANGE UNLESS SPECIFIED OTHERWISE, VERIFY COLOR WITH ARCHITECT. MANUFACTURER SHALL BE BRYANT, HUBBELL, LEVITON, OR PASS & SEYMOUR.

M. TOGGLE SWITCHES SHALL BE SINGLE POLE 20 AMP, 120-277 VOLT, BACK AND SIDE WIRED, SPECIFICATION GRADE, UNLESS NOTED OTHERWISE. SPECIAL SWITCHES, INCLUDING 3-WAY, PILOT LIGHT AND MOMENTARY CONTACT, SHALL BE AS REQUIRED OR AS INDICATED ON THE CONTRACT DOCUMENTS. COLOR SHALL BE WHITE UNLESS SPECIFIED OTHERWISE, VERIFY COLOR WITH ARCHITECT. MANUFACTURER SHALL BE BRYANT, HUBBELL, LEVITON, OR PASS & SEYMOUR.

N. LIGHTING FIXTURES SHALL INCLUDE ALL APPROPRIATE ACCESSORIES, MOUNTING FRAME AND TRIM FOR CEILING TYPE. FLUORESCENT FIXTURES SHALL INCLUDE RAPID-START STANDARD-OUTPUT ELECTRONIC BALLASTS WITH NINETY PERCENT (90%) BALLAST FACTOR AND TOTAL HARMONIC DISTORTION OF TEN PERCENT (10%) OR LESS, TYPE OR APPROPRIATE COMPACT TYPE LAMPS. LIGHTING FIXTURES SHALL INCLUDE COORDINATED AIR HANDLING CAPACITY, PLENUM RATING, DAMP LABEL, WET LABEL, AND SHALL BE EXPLOSION PROOF WHERE REQUIRED. LIGHTING FIXTURES RECESSED WITHIN GRID TYPE CEILINGS SHALL INCLUDE SECURING CLIPS AS REQUIRED BY THE LOCAL AUTHORITY. FIXTURE MANUFACTURER SHALL BE AS INDICATED; ELECTRONIC BALLAST MANUFACTURER SHALL BE ADVANCE, MOTOROLA, OR MAGNETEK WITH MINIMUM 3 YEAR WARRANTEE; LAMP MANUFACTURER SHALL BE OSRAM SYLVANIA, GENERAL ELECTRIC, OR PHILLIPS.

PART 3 – EXECUTION

A. PENETRATIONS AND CHANNELS IN FLOORS AND WALLS SHALL BE VIA CUTTING AND CORING AS REQUIRED FOR THE SIZE OF PRODUCT, ONLY IN ACCORDANCE WITH THE ARCHITECT AND ENGINEER RECOMMENDATIONS, AND AS SCHEDULED WITH THE BUILDING MANAGEMENT. PATCH AND FILL SLEEVES, INSERTS, PENETRATIONS, AND CHANNELS WITH APPROPRIATE CODE APPROVED FIRE SEALING OR FILLING TO MATCH OR RESTORE THE ORIGINAL FIRE RATING OF THE CONSTRUCTION.

B. MAKE FINAL CONNECTIONS TO VIBRATING EQUIPMENT, FIXTURES, AND DEVICES WITH FLEXIBLE METAL CONDUIT OR LIQUID TIGHT FLEXIBLE METAL CONDUIT AS REQUIRED. EXTEND GROUND WIRE THROUGH FLEXIBLE CONNECTIONS.

C. INSTALL CONDUIT, FITTINGS, SUPPORTS, ETC. IN ACCORDANCE WITH CODES, STANDARDS, AND MANUFACTURERS RECOMMENDATIONS. THE VOLTAGES IDENTIFIED IN THE FOLLOWING SCHEDULE ARE LINE-TO-LINE OR LINE-TO-NEUTRAL. INTERIOR CONCEALED LOCATIONS ARE THOSE LOCATIONS WHICH ARE ABOVE CEILINGS, WITHIN WALLS, WITHIN FLOOR SLABS, AND WITHIN DEDICATED ELECTRICAL ROOMS. CONDUIT INSTALLATION SHALL BE AS FOLLOWS UNLESS NOTED OTHERWISE:

VOLTAGE LOCATION	0V THRU 50V	ABOVE 50V THRU 250V	ABOVE 250V THRU 600V	ABOVE 600V
INTERIOR CONCEALED	EMT CONCEALED	EMT	<= 2" EMT >= 2 1/2" IMC	HWG
INTERIOR EXPOSED	EMT	<= 2" EMT >= 2 1/2" IMC	IMC	HWG
EXTERIOR AND HAZARDOUS LOCATIONS	IMC	IMC	HWG	HWG

D. INSTALL PULL BOXES, JUNCTION BOXES, AND OUTLET BOXES IN ACCORDANCE WITH CODES, STANDARDS, AND MANUFACTURING RECOMMENDATIONS. BOXES SHALL INCLUDE ACCESSIBLE COVERS, SHALL BE FABRICATED OF HEAVY GAGE GALVANIZED STEEL, AND SHALL BE SIZED WITH CODE TO ADEQUATELY FACILITATE PULLING AND CONNECTING THE QUANTITY OF WIRES, CABLES, AND FEEDERS CONTAINED. CONDUIT TERMINATIONS SHALL BE MADE WITH BUSHINGS AND LOCKNUTS. SUPPORTS FOR CONDUITS AND BOXES SHALL BE SUSPENDED DIRECTLY TO THE BUILDING STRUCTURAL COMPONENTS AND IN NO CASE SHALL THEY BE ATTACHED TO SUSPENDED CEILING GRID, DUCTWORK, OR PIPING COMPONENTS.

E. INSTALL FEEDERS AND BRANCH CIRCUIT WIRING IN ACCORDANCE WITH CODES, STANDARDS, AND MANUFACTURERS RECOMMENDATIONS. INSTALL NORMAL POWER, EMERGENCY POWER, FIRE ALARM, AND LIFE SAFETY SYSTEMS WITHIN CONTINUOUS METAL RACEWAYS. INSTALL CONCEALED SECURITY AND COMMUNICATIONS WIRING WITHIN CONTINUOUS METAL RACEWAYS. SEPARATE EACH SYSTEM INTO INDEPENDENT RACEWAYS. PROVIDE CABLE SUPPORTS AS REQUIRED. TERMINATE CABLES PER CODE AND MANUFACTURERS RECOMMENDATIONS. PROVIDE TWO (2) HOLE LUGS FOR CABLE 250 kcmil AND LARGER. POWER WIRING INSULATION SHALL BE AS FOLLOWS UNLESS NOTED OTHERWISE:

WIRE LOCATION	300 kcmil AND SMALLER	350 kcmil AND LARGER	ENVIRONMENTAL CONDITIONS
INTERIOR LOCATIONS	THHN/THWN	XHHW	DRY
EXTERIOR LOCATIONS	THHN/THWN THHN/THWN	XHHW XHHW-2	DAMP WET

F. INSTALL ELECTRICAL DEVICES, INCLUDING LOCAL DISCONNECT SWITCHES, OVERCURRENT PROTECTION, RECEPTACLES, ETC. IN ACCORDANCE WITH CODES, STANDARDS, AND MANUFACTURERS RECOMMENDATIONS.

G. INSTALL LIGHTING AND ASSOCIATED CONTROLS, INCLUDING FIXTURES, BALLASTS, LAMPS, TOGGLE SWITCHES IN ACCORDANCE WITH CODES, STANDARDS, AND MANUFACTURERS RECOMMENDATIONS.

H. INSTALL SINGLE AND MULTIPLE DEVICE COVER PLATES AS REQUIRED. EXTEND EXISTING DEVICES TO FINISHED SURFACES AS REQUIRED.

I. INSTALL FIRE ALARM AND OTHER LIFE SAFETY SYSTEMS IN ACCORDANCE WITH CODES, STANDARDS, AND MANUFACTURERS RECOMMENDATIONS.

J. INSTALL INSCRIPTION PLATES AND IDENTIFICATION MARKINGS FOR PRODUCTS AND WIRING INCLUDING THE SAME INSCRIPTIONS WHERE INDICATED ON THE CONTRACT DOCUMENTS. INSTALL PLASTIC LAMINATE NAMEPLATES ON ENCLOSURE FOR EACH DEVICE WITHIN METERING EQUIPMENT, DISTRIBUTION PANELBOARDS, BRANCH PANELBOARDS, MOTOR STARTERS, DISCONNECT SWITCHES, TRANSFORMERS, AND CONTACTORS. NAMEPLATES SHALL BE WHITE WITH BLACK CORE, 1 1/4 INCHES BY 3 INCHES MINIMUM, WITH 3/16 INCH LETTERING, SECURED TO EQUIPMENT WITH TWO MACHINE SCREWS. PREPARE AND INSTALL TYPE-WRITTEN PANEL DIRECTORY AND OTHER DEVICES WHOSE FUNCTION IS NOT READILY APPARENT. MARKERS SHALL BE SELF-STICKING FOR EACH WIRE AND CABLE AT TERMINATIONS AND AT EACH ACCESSIBLE POINT IN EQUIPMENT AND RACEWAY.

K. CLEAN ELECTRICAL APPARATUS PRIOR TO COMPLETION OF CONSTRUCTION. KEEP WORK AREAS CLEAN AT ALL TIMES.

L. ALTERATIONS AND DEMOLITION OF EXISTING SYSTEMS SHALL BE AS FOLLOWS:

1. PROVIDE ALL ALTERATIONS AND DEMOLITION OF THE EXISTING ELECTRICAL INSTALLATION AS REQUIRED, INCLUDING ANY INCIDENTAL MATERIALS TO EXECUTE ALL REMOVAL, REROUTING, RELOCATION, AND ANY OTHER MODIFICATIONS FOR PROPER ACCOMMODATION OF ALL NEW CONSTRUCTION AS INDICATED ON THE CONTRACT DOCUMENTS. ALL ALTERATIONS AND DEMOLITIONS SHALL BE AS INDICATED ON THE CONTRACT DOCUMENTS OR AS REQUIRED, INCLUDING ANY MODIFICATIONS NOT SPECIFICALLY IDENTIFIED ON ANY CONTRACT DOCUMENTS BUT REQUIRED TO COMPLETE ALL NEW CONSTRUCTION.

2. PROVIDE ALL MODIFICATIONS TO EXISTING EQUIPMENT AS REQUIRED OR AS INDICATED ON THE CONTRACT DOCUMENTS IN STRICT ACCORDANCE WITH THE EXISTING PRODUCT MANUFACTURERS RECOMMENDATIONS.

3. EXISTING RACEWAY, WIRE AND CABLE EXTENDING THROUGH THE CONSTRUCTION AREA BUT SERVING AREAS OUTSIDE THE CONTRACT SHALL BE REROUTED AND RECONNECTED AS REQUIRED. ALL MODIFICATIONS SHALL BE WITHOUT ANY INTERRUPTION TO THE BUILDING POWER, COMMUNICATIONS, SECURITY, FIRE ALARM AND LIFE SAFETY SYSTEMS, OR INTERFERENCE TO OTHER AREAS OR TENANTS. WHERE ANY MODIFICATIONS WOULD INTERFERE WITH THE DAILY OPERATIONS OF THE BUILDING OR OTHER TENANTS, AFTER-HOURS WORK OR TEMPORARY SERVICES SHALL BE PROVIDED WITH PRIOR WRITTEN APPROVAL FROM THE BUILDING.

4. EXISTING CONDUIT, WIRE, CABLE, SUPPORTS, HANGERS, AND OTHER ELECTRICAL INSTALLATION WHICH IS REMOVED, SHALL BE COMPLETELY REMOVED, BACK TO THE FIRST DEVICES OR THAT EQUIPMENT WHICH IS UNAFFECTED BY THE MODIFICATIONS. CONDUIT WHICH IS BURIED IN CONCRETE OR OTHERWISE INACCESSIBLE MAY BE ABANDONED AND CAPPED AT EACH END. ALL WIRE AND CABLE SHALL BE REMOVED FROM ANY ABANDONED CONDUIT.

5. EXISTING ELECTRICAL MATERIALS AND EQUIPMENT, INCLUDING LIGHTING FIXTURES, SWITCHES, RECEPTACLES, SPEAKERS, CONDUIT, OUTLET BOXES, FITTINGS, WIRE, CABLE, AND OTHER EQUIPMENT AND DEVICES WHICH ARE REMOVED SHALL REMAIN THE PROPERTY OF THE OWNER AND SHALL BE STORED OR DISCARDED AS DIRECTED.

6. REUSE EXISTING ELECTRICAL PRODUCTS AS INDICATED ON THE CONTRACT DOCUMENTS ONLY AS IS FOUND PRACTICAL. EXAMINE THE CONDITION OF ALL SUCH PRODUCTS, DETERMINE SUITABILITY FOR RE-USE, AND PERIODICALLY NOTIFY THE ARCHITECT/ENGINEER OF FINDINGS FOR FINAL ACCEPTANCE OF RE-USE. WIRE AND CABLE FOR NEW CONSTRUCTION OR EXTENSION OF AN EXISTING INSTALLATION SHALL BE NEW, IN NO CASE SHALL EXISTING WIRE AND CABLE BE REUSED.

7. REFER TO ARCHITECTURAL DEMOLITION DRAWINGS FOR FULL EXTENT AND SCOPE OF PARTITION AND CEILING MODIFICATIONS.

a. EXISTING CEILINGS TO REMAIN SHALL NOT BE ALTERED EXCEPT WHERE REMOVAL AND REPLACEMENT OF SURFACES IS REQUIRED TO MODIFY SYSTEMS WITHIN CEILING SPACE.

b. EXISTING CEILINGS TO BE REMOVED SHALL INCLUDE DEMOLITION OF ALL FIXTURES, EQUIPMENT, SPEAKERS, RACEWAY, AND WIRE, INCLUDING OBSOLETE OR PREVIOUSLY ABANDONED PRODUCTS. REMAINING AREAS SHALL ONLY BE ALTERED AS REQUIRED AND IN ACCORDANCE WITH THE CONTRACT DOCUMENTS.

c. EXISTING PARTITIONS TO REMAIN SHALL NOT BE ALTERED EXCEPT WHERE REMOVAL AND REPLACEMENT OF SURFACES IS REQUIRED TO MODIFY SYSTEMS WITHIN PARTITIONS.

d. EXISTING PARTITIONS TO BE REMOVED SHALL INCLUDE DEMOLITION OF ALL DEVICES, RACEWAY, AND WIRE INCLUDING ANY OBSOLETE OR PREVIOUSLY ABANDONED PRODUCTS. RACEWAY AND WIRING SYSTEMS SERVING OTHER REMAINING AREAS SHALL ONLY BE ALTERED AS REQUIRED AND IN ACCORDANCE WITH THE CONTRACT DOCUMENTS.

e. EXISTING FLOOR MOUNTED DEVICES SHALL BE DEMOLISHED. PROVIDE ABANDONING PLATES AND FIRE PROOFING AS REQUIRED.

8. REFER TO MECHANICAL AND PLUMBING DEMOLITION DRAWINGS FOR FULL EXTENT AND SCOPE OF ELECTRICALLY OPERATED EQUIPMENT MODIFICATIONS.

a. DEMOLITION OF EXISTING MECHANICAL EQUIPMENT SHALL INCLUDE ASSOCIATED DISCONNECTS, RACEWAY, WIRE AND CONTROLS.

Larson & Darby Group
Architects Engineers Planners
Rockford Office - 4949 Harrison Ave., Suite 100, P.O.Box 5307 Rockford, IL 61125 Tel (815) 484-0799 Fax (815) 229-9657

CITY OF ROCKFORD
120 N 3RD STREET
ROCKFORD, ILLINOIS

COPYRIGHT 2014
All drawn and written information appearing herein shall not be duplicated, disclosed, or otherwise used without the written consent of Larson & Darby Group

ISSUED FOR:	DATE
ISSUED FOR CONSTRUCTION	06-20-14

DRAWN	APPROVED
CRF	KBO

DATE: 06-26-2014
PROJECT NUMBER 24043
SHEET NUMBER E5.0