INDEX OF SHEETS

1. TITLE SHEET
2. GENERAL PLAN
3. CROSS SECTIONS
4. HALF PLAN AND REPAIR DETAILS
5. HALF PLAN
6. SIDEWALK DETAILS AT PIERS 1 THRU 7
7. JOINT DETAILS
8. CONCRETE DECK BEAMS
9. EAST APPROACH SPANS
10. SUBSTRUCTURE REPAIRS
11. NORTH RAILING DETAILS
12. SOUTH RAILING DETAILS
13. RAILING AND PARAPET DETAILS
14. RAILING AND PARAPET DETAILS
15. PARAPET AND SIDEWALK DETAILS
16. EXPANSION JOINT
17. BAR STEEL DETAILS
18. DRAIN DETAILS
19. EAST APPROACH ABUTMENT DETAILS
20. EAST APPROACH ABUTMENT DETAILS
21. APPROACH DETAILS

STANDARDS:

2298-6
2299-9
2300-2
U-1

INCLUDED IN PROPOSAL

STATE OF ILLINOIS
CITY OF ROCKFORD

PLANS FOR PROPOSED MOTOR FUEL TAX PROJECT

SECTION 80-00284-00-BR
MORGAN STREET

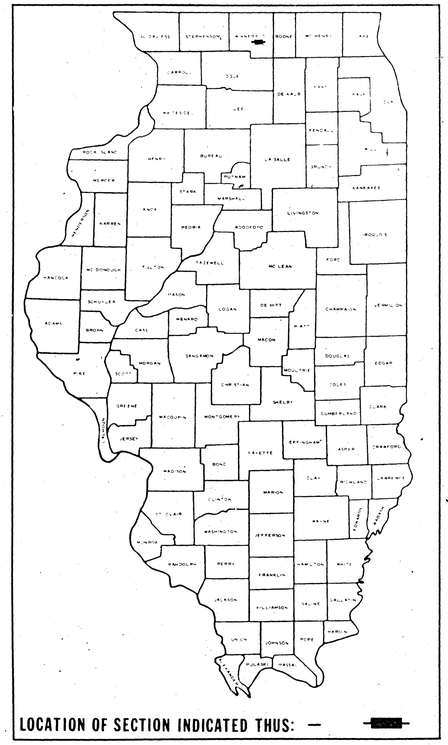

LOCATION OF SECTION INDICATED THUS: —

SECTION 80-00284-00-BR
BEGINS AT STA. 9 + 25

SECTION 80-00284-00-BR
ENDS AT STA. 23 + 24

N

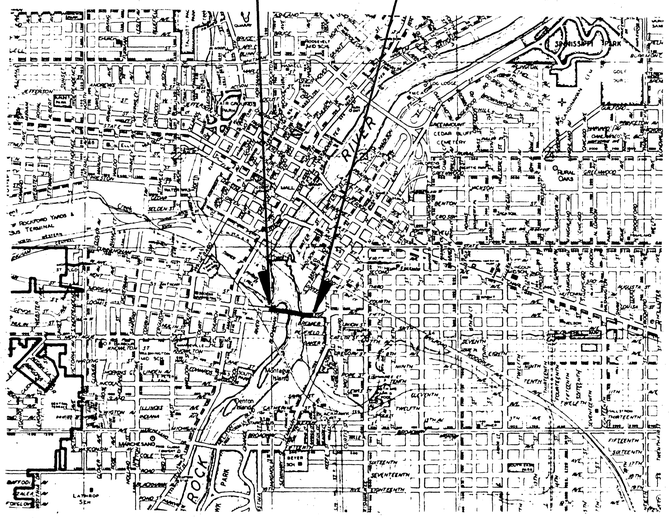

LOCATION MAP

0 200 2400 3600
scale feet

NET LENGTH = 1399.00 FT. (0.265 MI.)

"CALL J.U.L.I.E.
BEFORE YOU DIG
800-892-0123"

APPROVED
August 11, 1983
By Ralph C. Weaver
District Engineer

I certify that to the best of my knowledge, information and belief, this bridge design is structurally adequate for the design loading shown on the plans. The design is an economical one for the style of structure and complies with requirements of the current 'AASHTO Standard Specifications for Highway Bridges.'

APPROVED FOR

BY

DATE

ORIGINAL PLANS PREPARED
BY
DONOHUE & ASSOCIATES, INC.
CONSULTING ENGINEERS
MADISON, WISCONSIN

STATE OF ILLINOIS
ANTHONY P. LANDINI
061-004322
MADISON, WI
REGISTERED STRUCTURAL ENGINEER

Anthony P. Landini
CONSULTING ENGINEER

7-12-83
DATE

TITLE SHEET

Scale N.A.
Date Apr. 20 1983
Designer P.Z.
Drafter L.E.N.
Checker P.Z.
Approved R.L.

No.	Revision	By	Date

Donohue
Engineers & Architects

MORGAN STREET BRIDGE
REHABILITATION
CITY OF ROCKFORD M F T

Project No. 11381.000

Sheet No. 1

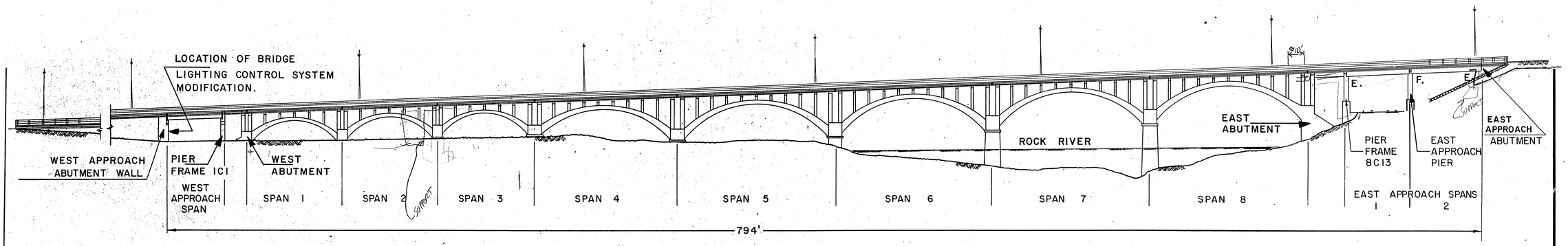

EPOXY CRACK SEALING

Location	Length
West Approach Abut. Wall - Vert.	2 @ 12' = 24'
Pier 1C1, West Face - Horiz.	1 @ 8' = 8'
Pier 8C13, Cap over North Column - E. Face	1 @ 4' = 4'

SOUTH ELEVATION OF MORGAN STREET BRIDGE

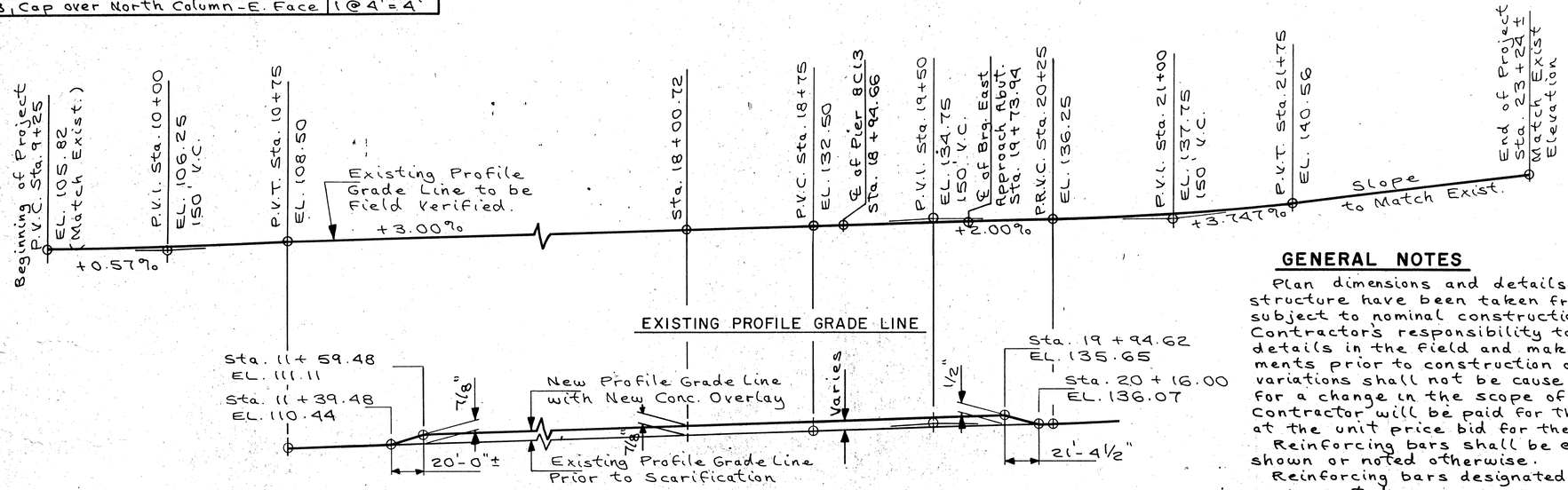

PROFILE GRADE LINE - MORGAN STREET

CURVE DATA

P.C. Sta. 18 + 66.72
P.I. Sta. 19 + 58.69
P.T. Sta. 20 + 50.15
Δ = 5°-49'-40"
D = 3°-10'-16"
R = 1806.805
T = 91.97'
L = 183.777'
E = 2.34'
S.E. = 0.027 '/'

GENERAL NOTES

Plan dimensions and details relative to existing structure have been taken from existing plans and are subject to nominal construction variations. It shall be the Contractor's responsibility to verify such dimensions and details in the field and make necessary approved adjustments prior to construction or ordering of materials. Such variations shall not be cause for additional compensation for a change in the scope of the work, however, the Contractor will be paid for the quantity actually furnished at the unit price bid for the work.

Reinforcing bars shall be embedded 2" clear unless shown or noted otherwise.

Reinforcing bars designated with (E) shall be epoxy coated.

Reinforcing bars shall conform to the requirements of A.A.S.H.T.O. M-31 or M-53 Grade 60.

Existing reinforcing bars exposed during concrete removal operations shall be utilized in the new work unless shown or noted otherwise.

The Concrete above the New Precast Prestressed Concrete Deck Beams, the South sidewalk addition and the new parapet will be involved in the bid item "Class X Concrete".

TOTAL BILL OF MATERIAL

Item No.	ITEMS	Approximate Quantities
1.	Concrete Scarification	3260 SY
2.	Deck Slab Repairs (Partial Depth)	940 SY
3.	Deck Slab Repairs (Full Depth)	110 SY
4.	Bridge Curb Repairs	250 LF
5.	Bridge Sidewalk Repair (Partial Depth)	2050 SF
6.	Joint Reconstruction Arch Spans	1 LS
7.	Modification of Drainage Scuppers	15 EA.
8.	Joint Reconstruction Approach Spans	1 LS
9.	Approach Construction	1 LS
10.	Latex Modified Concrete Overlay	3180 SY
11.	Removal of Existing Superstructures	1 LS
12.	Precast Prestressed Concrete Deck Beams (17" Depth)	3510 SF
13.	Reinforcement Bars	17930 LBS
14.	Reinforcement Bars (Epoxy Coated)	42850 LBS
15.	Class X Concrete	80 CY
16.	Class X Concrete (Deck Beam Overlay)	46 CY
17.	Class X Concrete (Parapet)	112 CY
18.	Epoxy Surface Treatment	17100 SF
19.	Bituminous Surface Removal, 2½	2020 SY
20.	Portland Cement Concrete Base Course Repair	160 SY
21.	Bituminous Concrete Surface Course, Mixture D, Class I	270 TON
22.	Epoxy Crack Sealing	36 LF
23.	Bridge Lighting Control System Modification	1 LS
24.	Bituminous Materials (Prime Coat)	160 GAL
25.	Furnishing and Erecting Steel Railing	957 LF
26.	Aggregate (Prime Coat)	4 TON
27.	Bridge Handrail Removal	996 LF
28.	Bridge Curb Removal	996 LF
29.	Sidewalk Removal	335 SF
30.	Portland Cement Concrete Sidewalk, 5"	415 SF
31.	Temporary Bituminous Overlay	275 TON
32.	Railroad Protective Services	1 LS
33.	Cleaning & Painting Steel Railing	1 LS

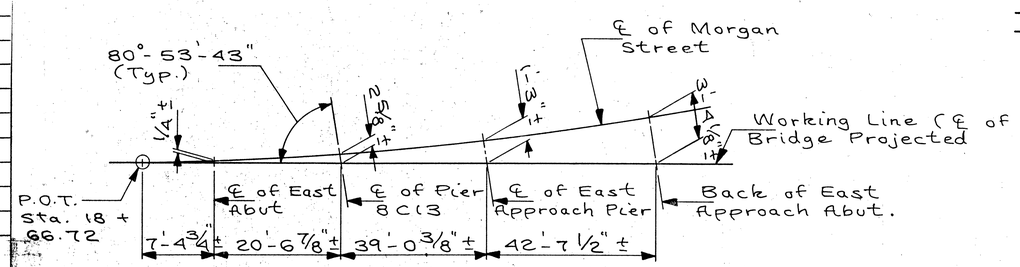

HORIZONTAL ALIGNMENT AT EAST END OF BRIDGE

Design Data
Design Specifications: A.A.S.H.T.O. 1977 thru 1982 INTERIM SPEC's.
Design Load: HS-20
Design Stresses:
Concrete
f'c = 3,500 p.s.i.
Bar Steel Reinforcement
fy = 60,000 p.s.i.
Structural Steel
fy = 50,000 p.s.i.
Prestressed Concrete & Prestressing Steel
f'c = 5,000 p.s.i.
f'ci = 4,000 p.s.i.
f's = 270,000 p.s.i.
f'si = 189,000 p.s.i.

GENERAL PLAN

No. | Revision | By | Date

Scale N.A.
Date Apr. 20 1983
Designed P.Z.
Drafter L.E.N.
Checker P.Z.
Approved R.L.

Donohue
Engineers & Architects

MORGAN STREET BRIDGE REHABILITATION
CITY OF ROCKFORD M F T

Project No. 11381.000

Sheet No. 2

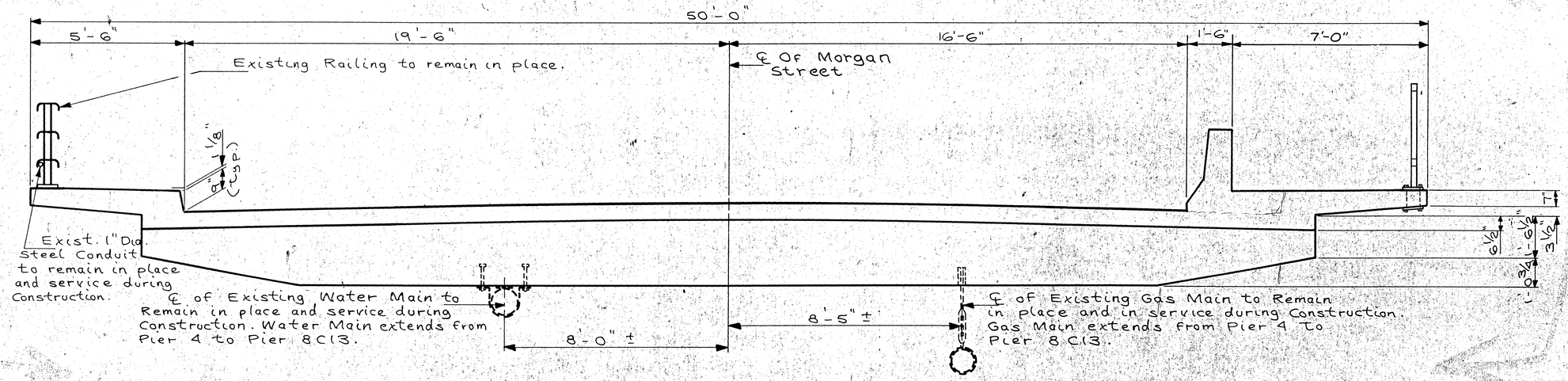

CROSS SECTION THRU DECK AT FLOOR BEAMS
(Looking East)

NOTE A:
The Existing Water Main is supported from deck slab at Sta. 14 + 85 and 18 + 89. Deck slab repairs shall not be made near these two locations without notifying the Rockford Water Department. Temporary and permanent support details to be the responsibility of the Rockford Water Department.

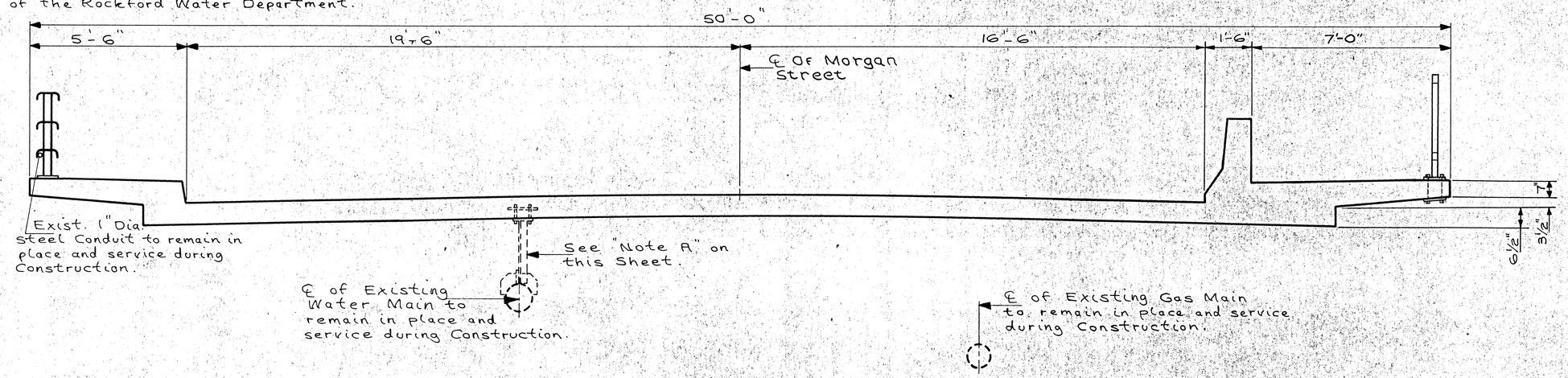

CROSS SECTION THRU DECK BETWEEN FLOOR BEAMS
(Looking East)

\# \# Slopes shown apply West of Sta. 18 + 00.72. See "Table of Pavement Elevations" on sheet 17 for locations East of Sta. 18 + 00.72.

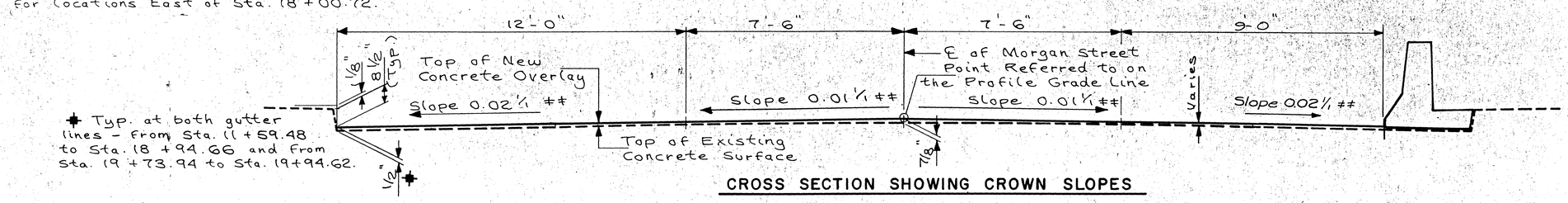

CROSS SECTION SHOWING CROWN SLOPES

CROSS SECTIONS

No	Revision	By	Date

Scale N.A.
Date Sept. 20 1983
Designer P.Z.
Drafter L.E.N.
Checker P.Z.
Approver J.R.L.

Donohue
Engineers & Architects

MORGAN STREET BRIDGE
REHABILITATION
CITY OF ROCKFORD M F T

Project No. 11381.000
File No.
Sheet No. 3

(R.O.W. - WEST ABUTMENT - SPAN 5
AIR RIGHTS ONLY)

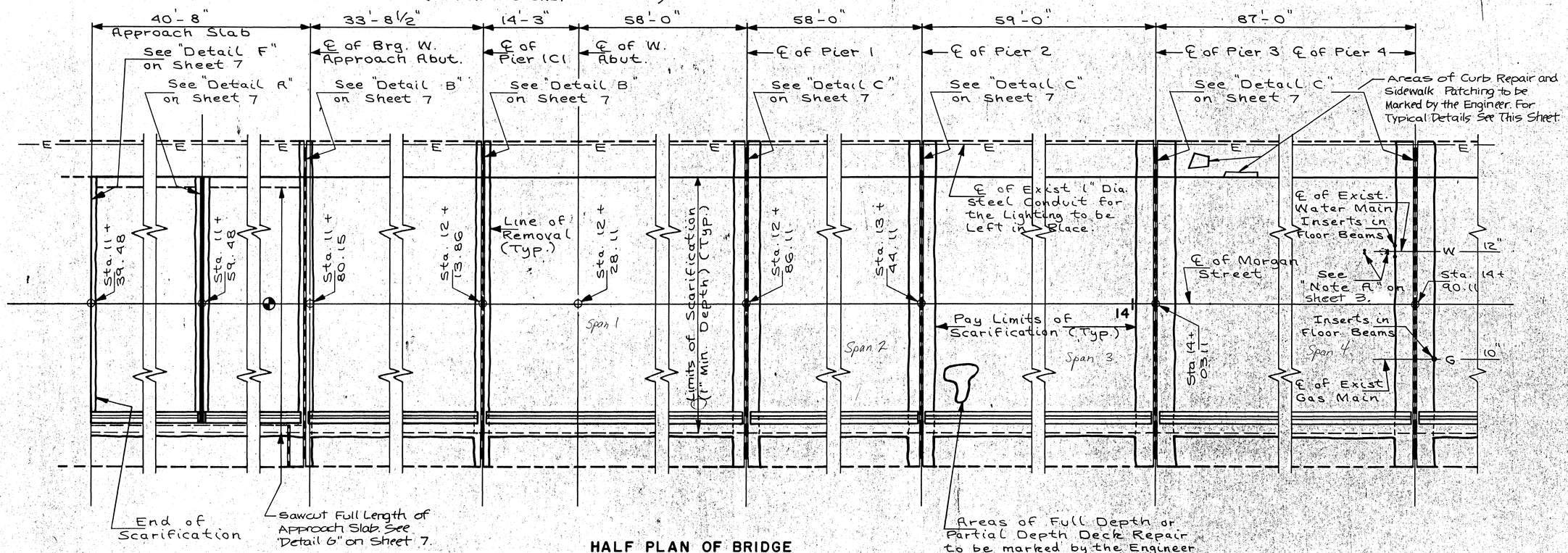

HALF PLAN OF BRIDGE

Manhole to be adjusted to match "New Concrete Overlay" surface. The exact location of the manhole to be field verified.

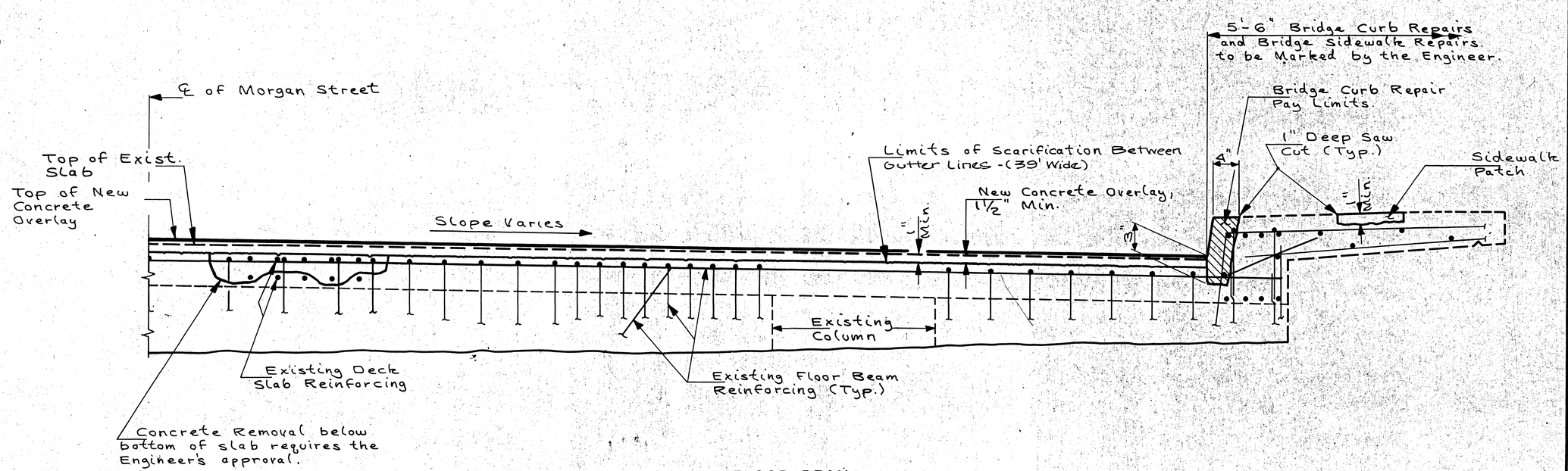

HALF SECTION THRU BRIDGE AT FLOOR BEAM
LOOKING WEST

HALF PLAN & REPAIR DETAILS

Donohue
Engineers & Architects

Scale N.A.
Date Apr. 20 1983
Designer P.Z.
Drafter LEN
Checker P.Z.
Approved RL

No | Revision | By | Date

MORGAN STREET BRIDGE
REHABILITATION
CITY OF ROCKFORD MFT

Project No. 11381.000
File No.
Sheet No. 4

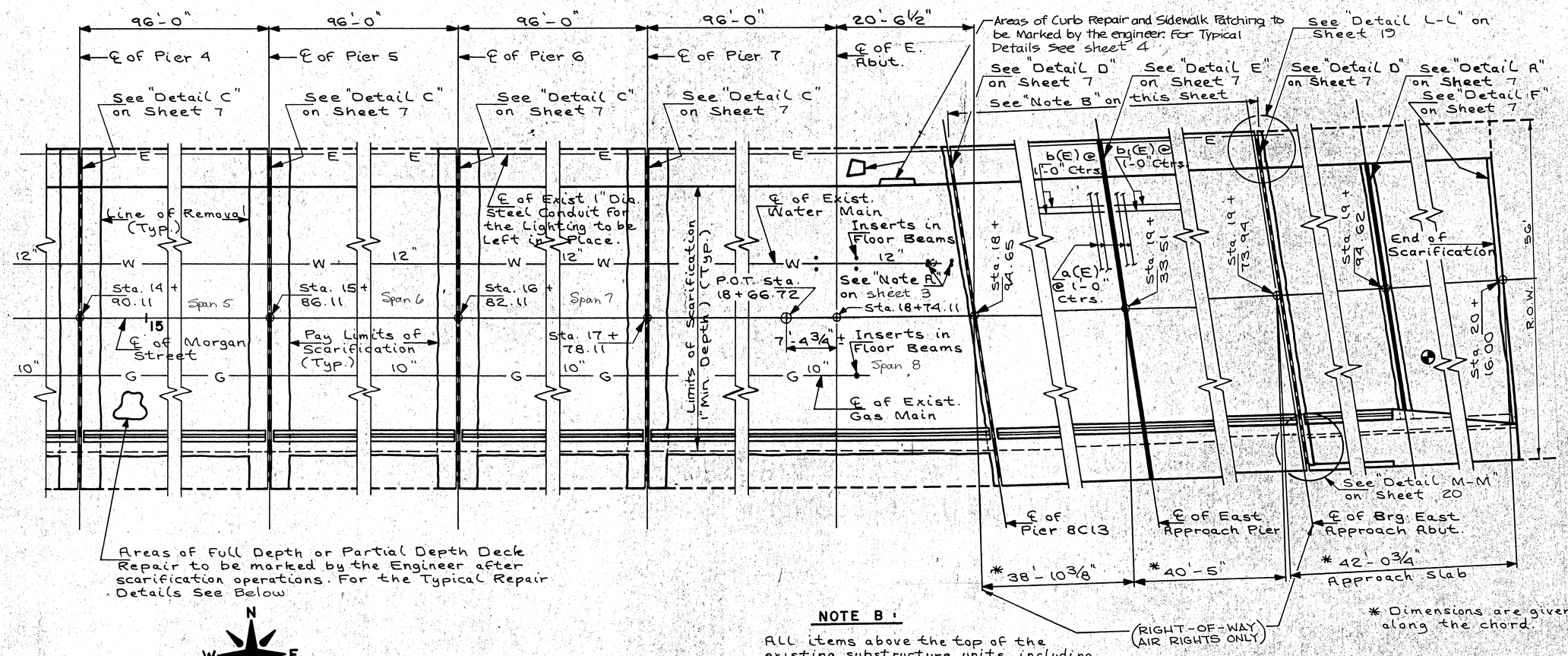

* Dimensions are given along the chord.

HALF PLAN OF BRIDGE

⊕ Manhole to be adjusted to match "New Concrete Overlay" surface. The exact location of the manhole shall be field verified.

NOTE B :

All items above the top of the existing substructure units, including bearing pads and dowel bars, in these two spans shall be replaced with new construction shown on sheets 8, 9 and 10. The existing railing shall be salvaged and utilized into the new construction. (North Railing Only).

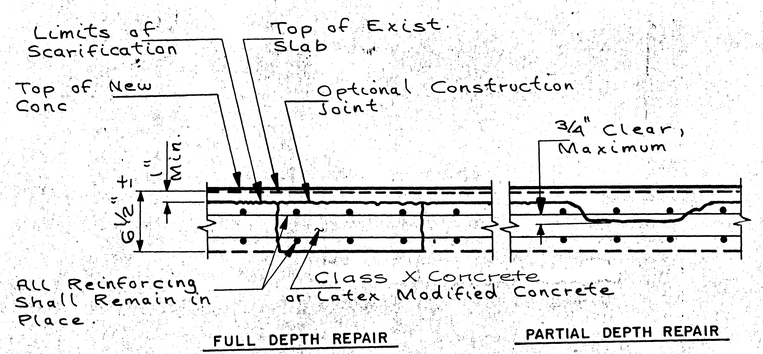

TYPICAL DECK SLAB REPAIR DETAILS
(Parallel to Floor Beams)

HALF PLAN

Donohue
Engineers & Architects

No.	Revision	By	Date

Scale N.A.
Date Apr. 20 1983
Designer P.Z.
Drafter L.E.N.
Checker P.Z.
Approved R.L.

MORGAN STREET BRIDGE REHABILITATION
CITY OF ROCKFORD M F T

Project No. 11381.000

Sheet No. 5

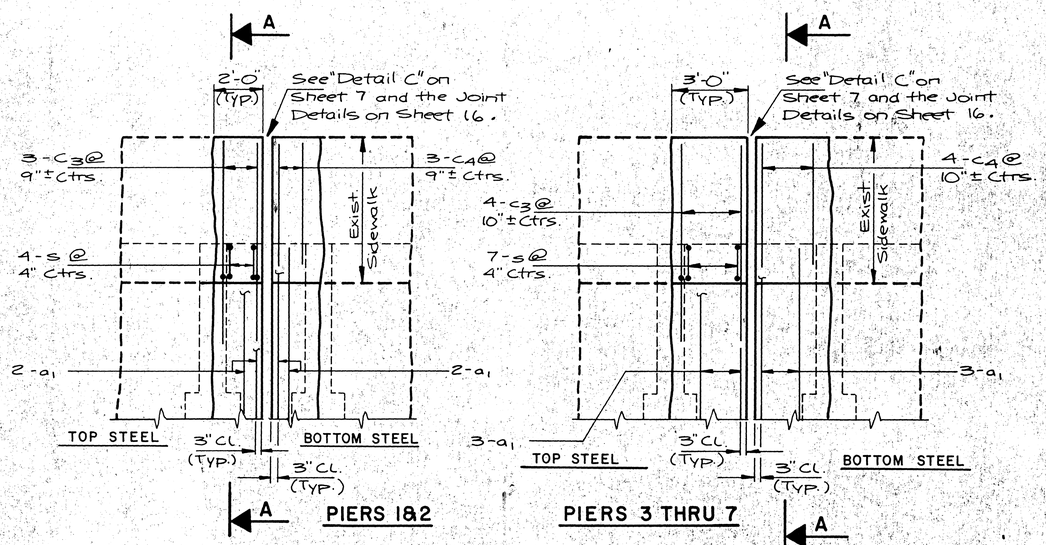

PARTIAL PLAN OF NORTH SIDEWALK AT PIERS 1 THRU 7

Note: The new concrete limits shall match existing concrete limits.

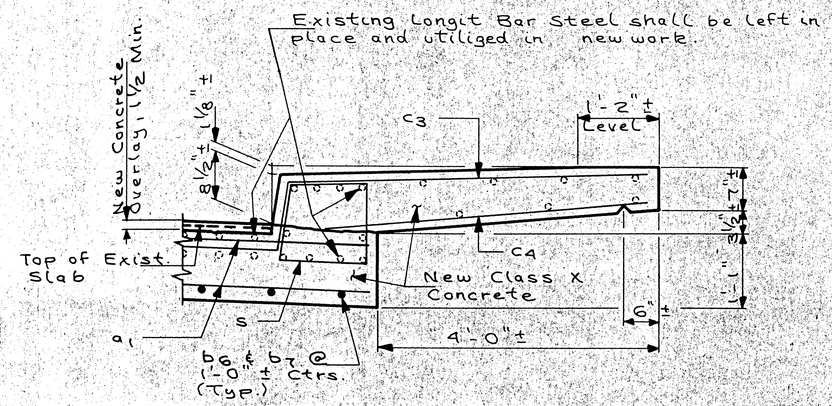

SECTION A-A THRU SIDEWALK AT PIERS 1 THRU 7

Note: For Bar Steel Reinforcing Details See Sheet 17.

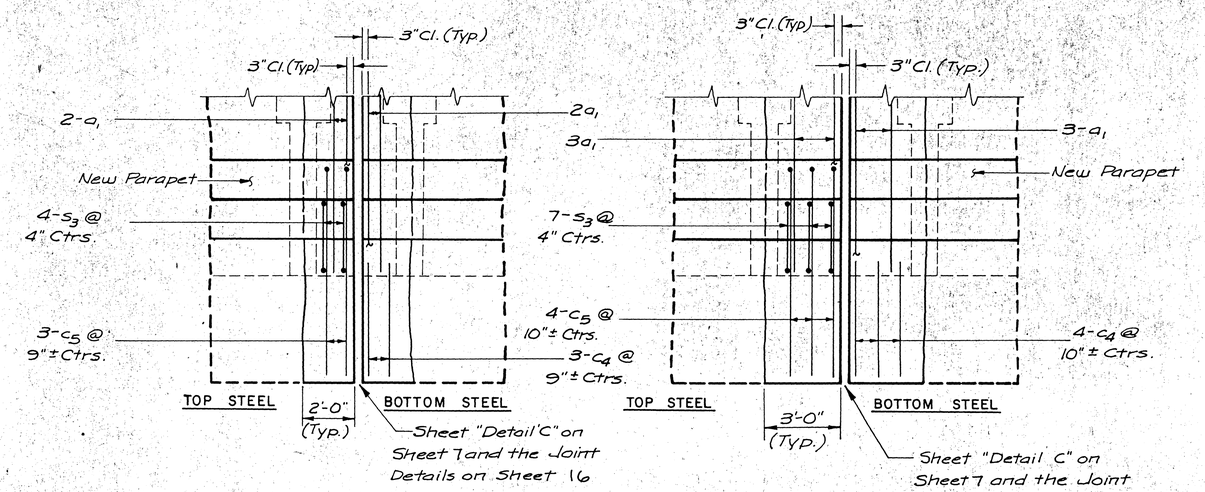

PARTIAL PLAN OF SIDEWALK AT PIERS 1 THRU 7

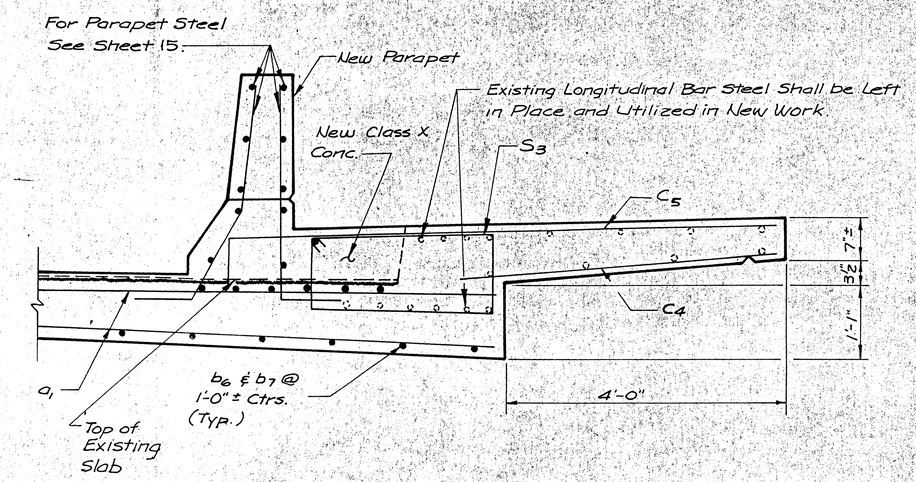

SECTION THRU SOUTH SIDEWALK AT PIERS 1 THRU 7

Note: For Bar Steel Reinforcing Details See Sheet 17

Note: The New Concrete Limits Shall Match Existing Concrete Limits.

SIDEWALK DETAILS AT PIERS 1 THRU 7

No.	Revision	By	Date

Scale N.A.
Date Apr. 20 1983
Designer P.Z.
Drafter L.E.N.
Checker P.Z.
Approved J.R.L.

Donohue
Engineers & Architects

MORGAN STREET BRIDGE REHABILITATION
CITY OF ROCKFORD M F T

Project No. 11381.000
File No.
Sheet No. 6

▲ 3/4" Dia. x 6" Long Expansion Bolts @ 1'-6" Ctrs. - Incidental to the bid item "Joint Reconstruction - Approach Spans".

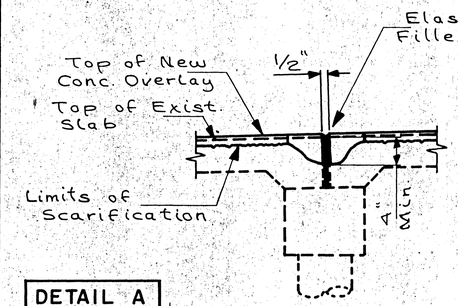

DETAIL A

SECTION THRU APPROACH SLABS

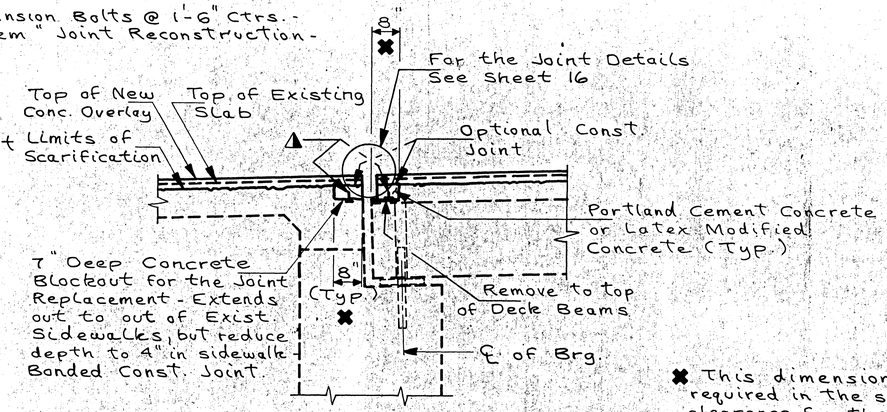

DETAIL B

SECTION THRU JOINT — WEST APPROACH ABUTMENT

Note: Details at Pier LC1 are similar to these details.

✖ This dimension shall be increased as required in the sidewalk area to allow clearance for the sidewalk cover plates.

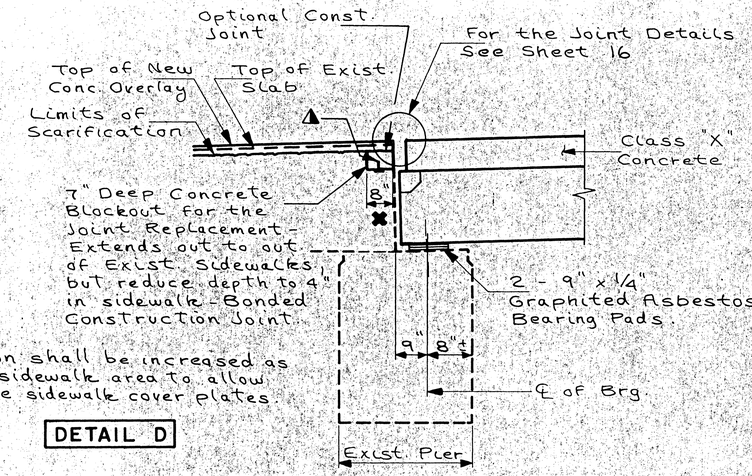

DETAIL D

SECTION THRU JOINT AT PIER 8C13

Note: Details at the East Approach Abutment are similar to these details.

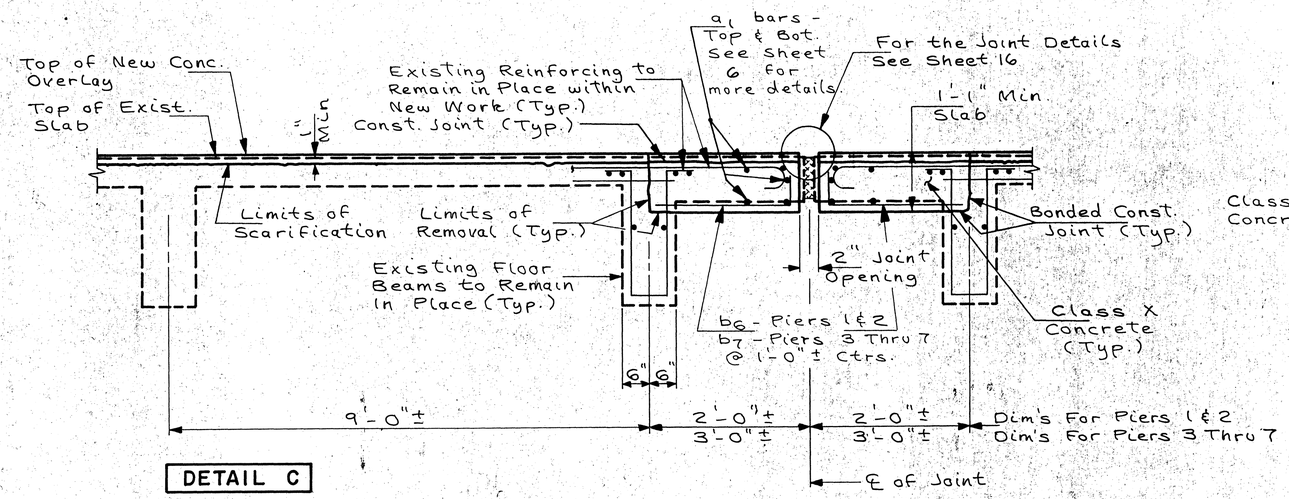

DETAIL C

SECTION THRU JOINTS AT PIERS 1 THRU 7

Note: Ends of beams shall be aligned at the Expansion Joint. Any lineal variations in the beam lengths shall be placed at the fixed joints.

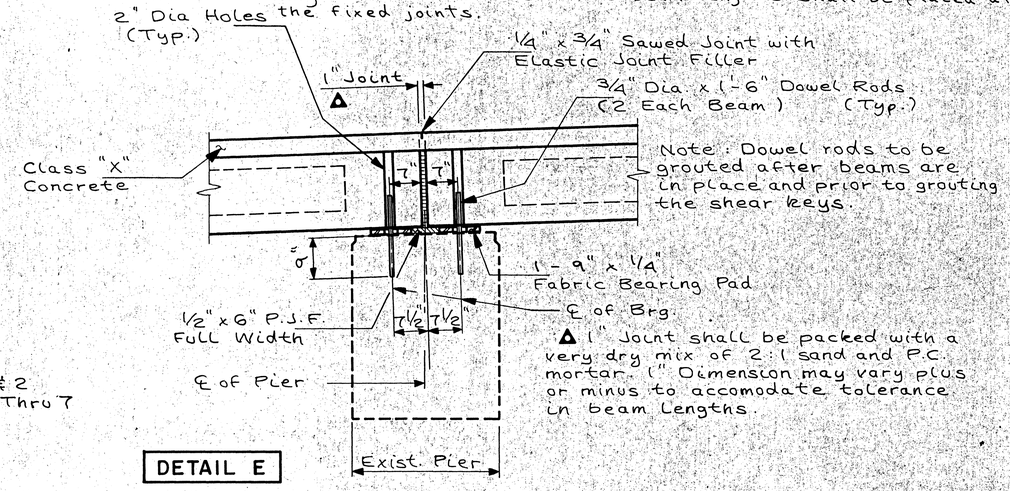

▲ 1" Joint shall be packed with a very dry mix of 2:1 sand and P.C. mortar. 1" Dimension may vary plus or minus to accomodate tolerance in beam lengths.

DETAIL E

SECTION THRU JOINT AT EAST APPROACH PIER

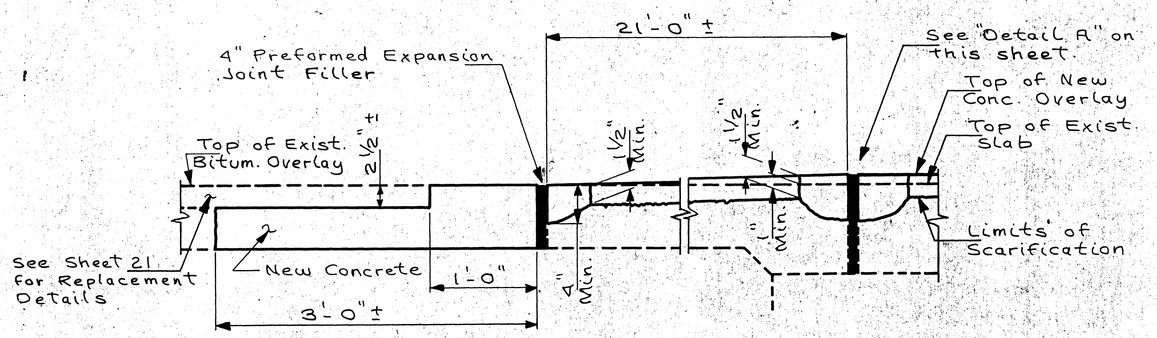

DETAIL F

SECTION THRU JOINT AT OVERLAY TRANSITION

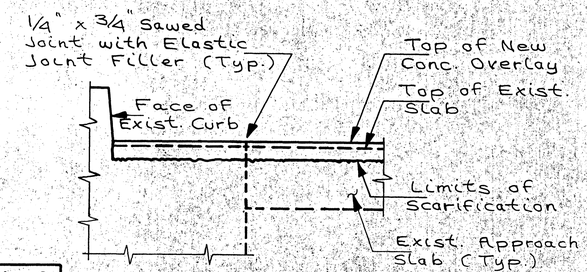

DETAIL G

SECTION THRU LONGITUDINAL JOINTS AT APPROACH SLABS

JOINT DETAILS

Donohue
Engineers & Architects

No.	Revision	By	Date

Scale: N.A.
Date: Apr. 20, 1983
Designer: P.Z.
Drafter: L.E.N.
Checker: P.Z.
Approved: R.L.

MORGAN STREET BRIDGE REHABILITATION
CITY OF ROCKFORD M F-T

Project No. 11381.000
File No.
Sheet No. 7

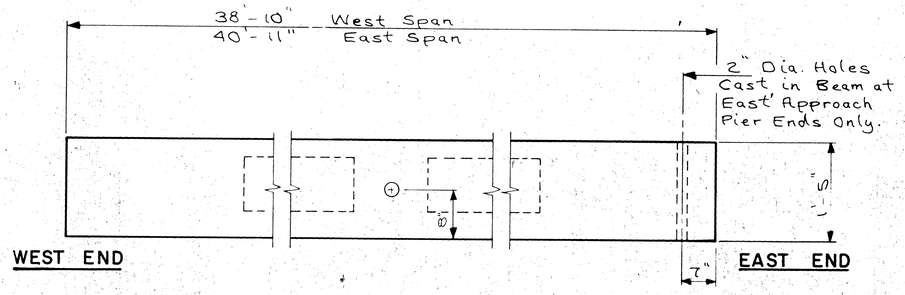

ELEVATION OF INTERIOR DECK BEAM

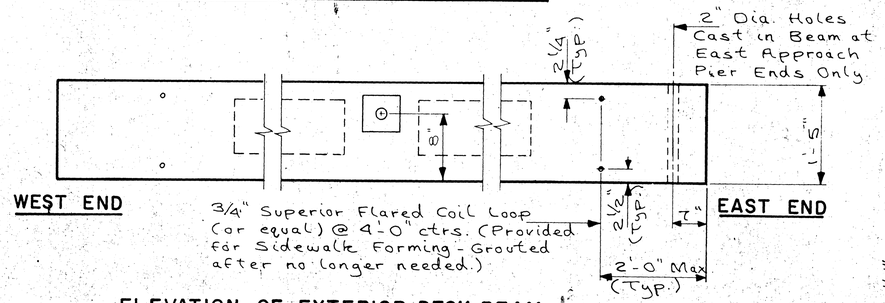

ELEVATION OF EXTERIOR DECK BEAM

BILL OF MATERIAL FOR DECK BEAM

Bar Mark	No. Req'd.	Size	Length	Shape
a_2	12	#5	22'-10"	
b_8	44	#5	38'-5"	
b_9	44	#5	40'-6"	
b_{10}	66	#5	8'-0"	
b_{11}	66	#5	8'-6"	
e	88	#5	1'-7"	
U	176	#4	6'-0"	
U_1	176	#4	6'-4"	
U_2 (E)	1,452	#3	4'-1"	

Precast Prestressed Concrete Deck Beams	Sq. Ft.	3,510
Reinforcement Bars	LBS.	6,640
Reinforcement Bars (Epoxy Coated)	LBS.	2,230

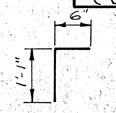

e BAR

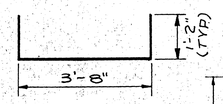

U BAR

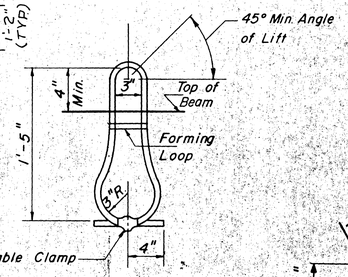

LIFTING LOOP DETAIL

Note: Loops shall be burned off after beams have been erected.

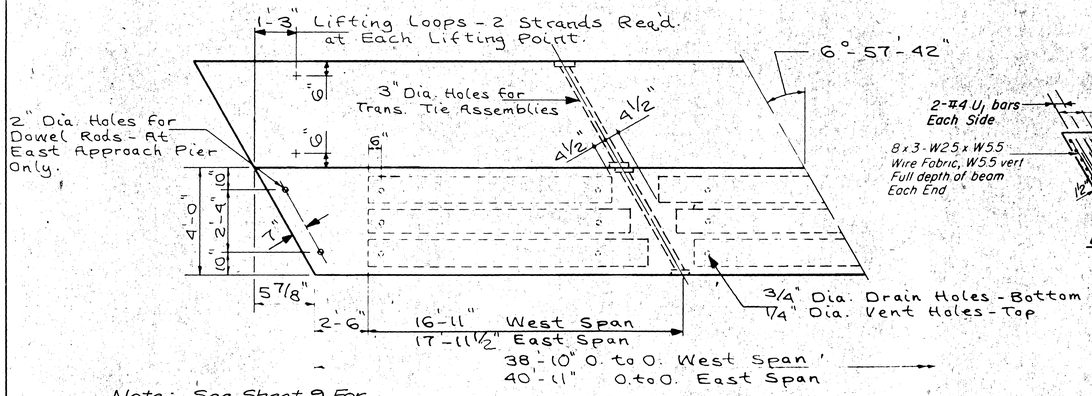

Note: See Sheet 9 For "End of Beam" Detail.

PLAN

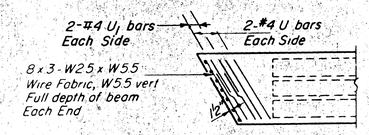

END PLAN

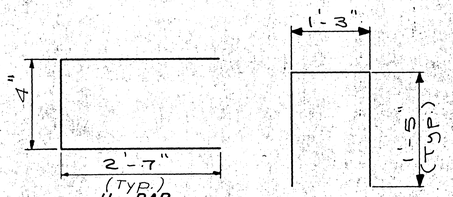

U_1 BAR

U_2(E) BAR

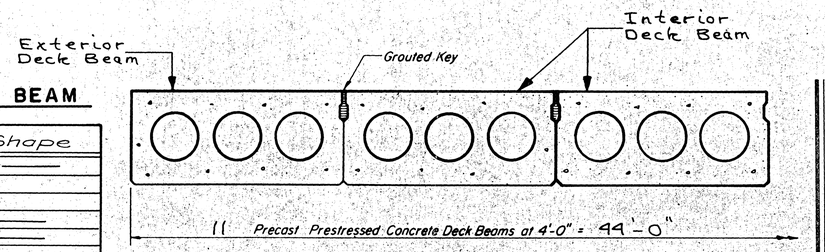

PARTIAL CROSS SECTION

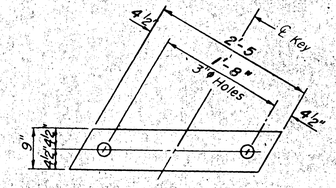

FABRIC BEARING PAD (Interior)

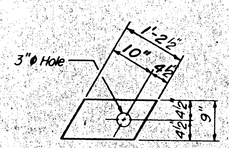

FABRIC BEARING PAD (Exterior)

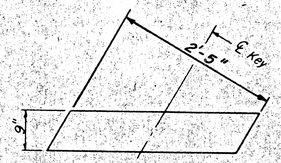

GRAPHITED ASBESTOS BEARING PAD (Interior)

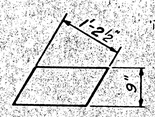

GRAPHITED ASBESTOS BEARING PAD (Exterior)

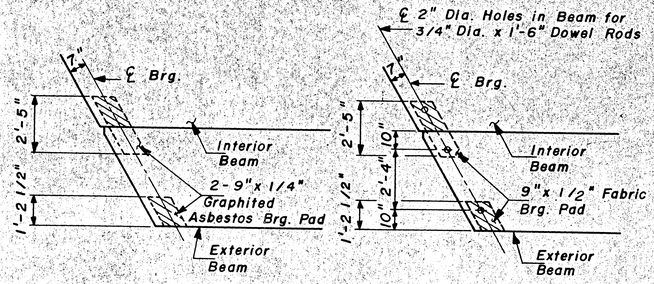

EXPANSION BEARING

FIXED BEARING

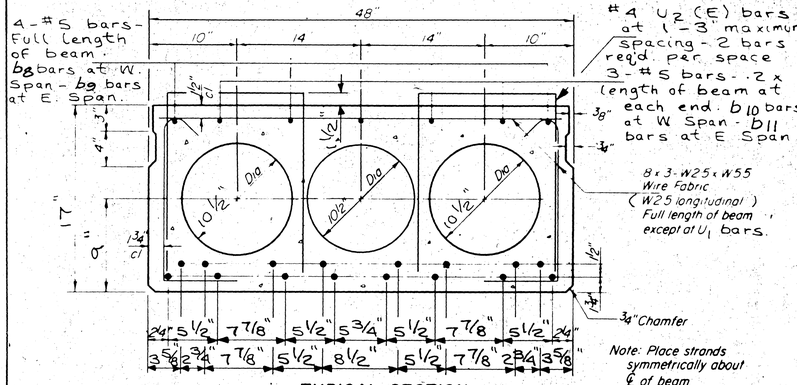

Note: Place strands symmetrically about ℄ of beam

TYPICAL SECTION

1/2" ø Strands, Each Strand Stressed to 28,900 Lbs.
8 - Strands 1 3/4" up, 8 - Strands 3 1/4" up,

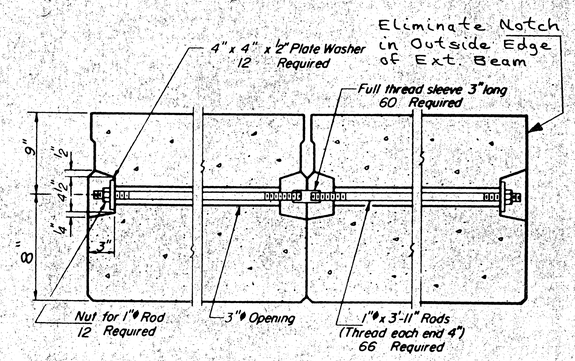

TYPICAL TRANSVERSE TIE ASSEMBLY

NOTES

PRESTRESSING STEEL SHALL BE NON-GALVANIZED HIGH STRENGTH, STRESS-RELIEVED 7-WIRE STRAND, GRADE 270.

THE NOMINAL DIAMETER SHALL BE 1/2" AND THE NOMINAL CROSS-SECTIONAL AREA SHALL BE 0.153 SQ. IN.

LIFTING LOOPS SHALL BE 5/8" DIAMETER, 6 x 25 CLASS WIRE ROPE WITH FIBER CORE AND SHALL HAVE A MINIMUM ULTIMATE TENSILE STRENGTH OF 33,000 LBS. OR 2-1/2" DIA.-270 K.S.I. STRANDS.

THE 1" DIA. RODS IN THE TRANSVERSE TIE ASSEMBLY SHALL BE TIGHTENED TO A SNUG FIT AND THE THREADS SET. POCKETS THAT RECEIVE TRANSVERSE TIE BAR ON OUTSIDE SHALL BE FILLED WITH GROUT AFTER TRANSVERSE TIE ASSEMBLY IS IN PLACE.

REINFORCEMENT BARS SHALL CONFORM TO AASHTO M-31 OR M-53, GRADE 60.

THE BEARING SEAT SURFACES SHALL BE ADJUSTED BY SHIMMING TO ASSURE FIRM AND EVEN BEARING. TWO 1/8" FABRIC ADJUSTING SHIMS OF THE DIMENSIONS OF THE EXTERIOR BEARING PAD SHALL BE PROVIDED FOR EACH BEARING.

COST OF REINFORCEMENT AND ACCESSORIES CAST INTO THE BEAM, OF BEARING PADS, AND OF GROUTING LONGITUDINAL SHEAR KEYS IS INCLUDED IN UNIT PRICE BID FOR "PRECAST PRESTRESSED CONCRETE DECK BEAMS."

KEYWAY SURFACES SHALL BE CLEANED TO REMOVE FORM OIL OR OTHER BOND BREAKING MATERIAL PRIOR TO SHIPMENT OF THE BEAMS. CLEANING SHALL BE DONE BY SANDBLASTING THE KEYWAY AREA BETWEEN TOP OF THE BEAM AND THE BOTTOM EDGE OF KEY.

CONCRETE DECK BEAM

No.	Revision	By	Date

Scale N.A.
Date Apr. 20 1983
Designer P.Z.
Drafter L.E.N.
Checker P.Z.
Approved R.L.

Donohue
Engineers & Architects

MORGAN STREET BRIDGE REHABILITATION
CITY OF ROCKFORD M F T

Project No. 11381.000
File No.
Sheet No. 8

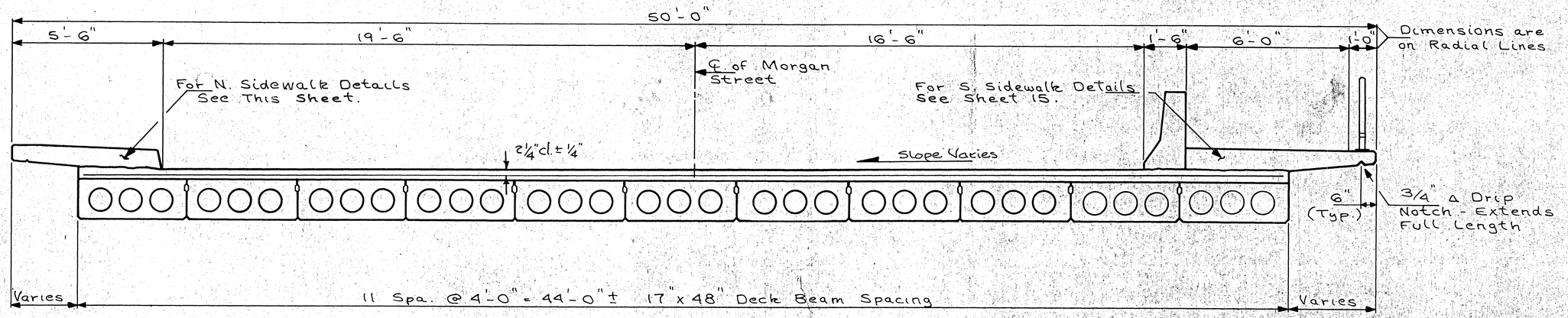

CROSS SECTION THRU BRIDGE AT DECK BEAMS

(Looking East)

★ If construction discrepancies are of such a magnitude that this dimension is less than 4", the grade line shall be revised.

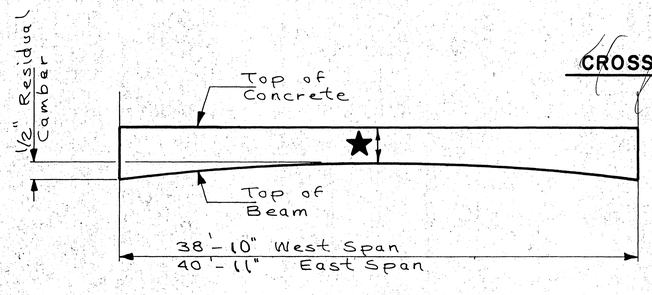

CONCRETE SURFACE PROFILE

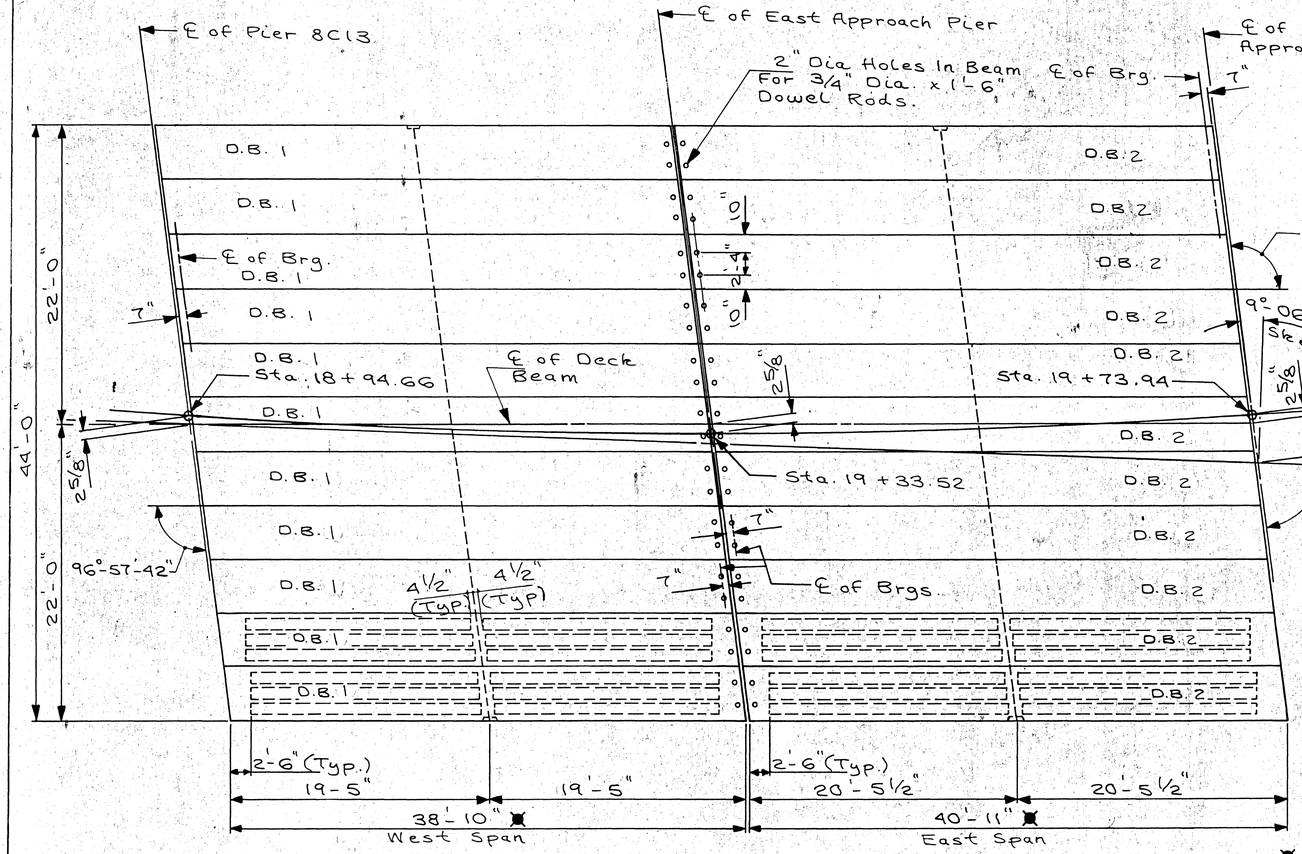

PLAN OF THE NEW EAST APPROACH SPANS

✱ The lengths of each beam to be based on field measurements. Existing substructure units may not be parallel.

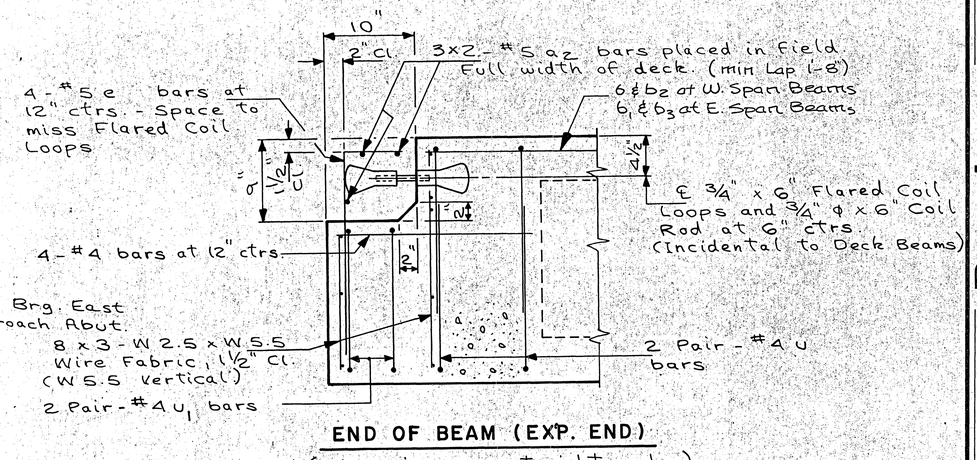

END OF BEAM (EXP. END)

(Dimensions are at right angles)

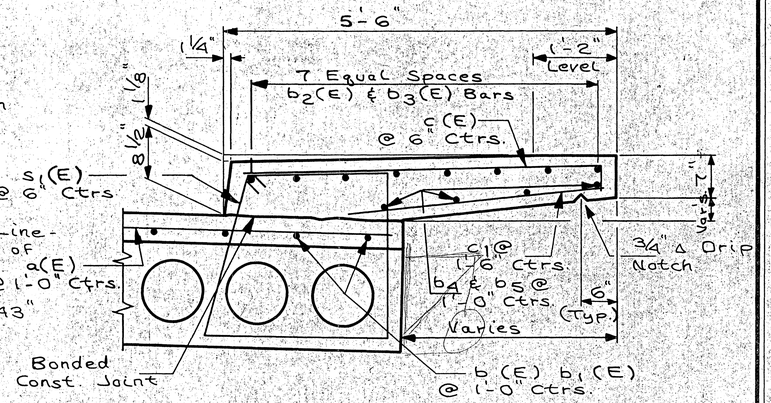

SECTION THRU NORTH SIDEWALK IN EAST APPROACH SPANS ONLY

(Looking West)

Note: For bar steel reinforcing details see sheet 17.

EAST APPROACH SPANS

Donohue
Engineers & Architects

No.	Revision	By	Date

Scale N.A.
Date Apr. 20 1983
Designer P.Z.
Drafter LEN
Checker P.Z.
Approved RL

MORGAN STREET BRIDGE REHABILITATION
CITY OF ROCKFORD M F T

Project No 11381.000
File No.
Sheet No. 9

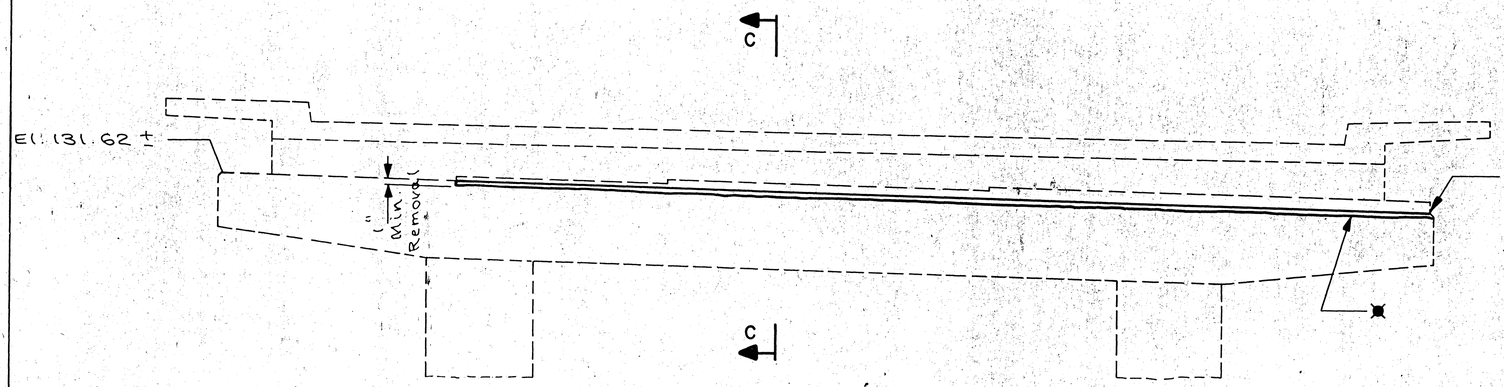

ELEVATION OF PIER 8C13
(Looking West)

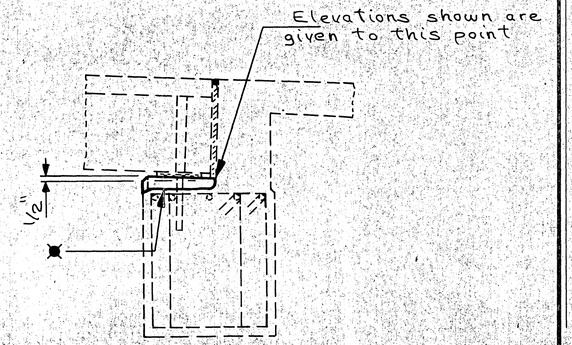

SECTION C-C

✱ Bonded Joint - Build up beam seats to elevations as shown with Class X Concrete.

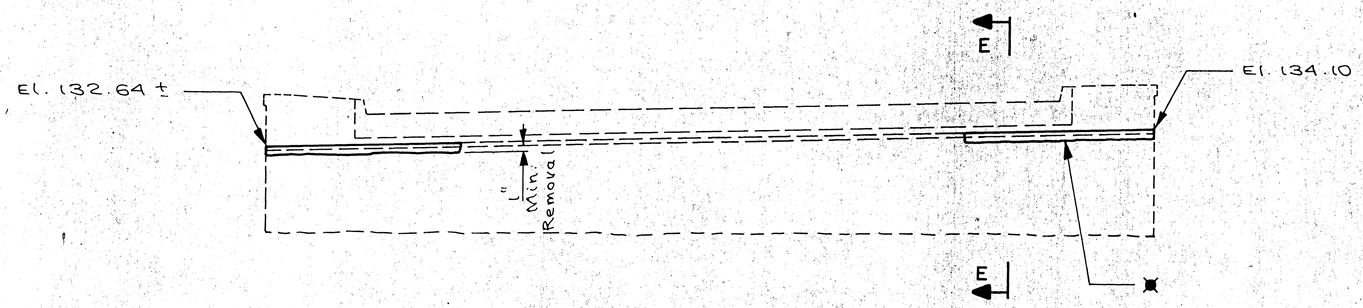

ELEVATION OF EAST APPROACH ABUTMENT
(Looking East)

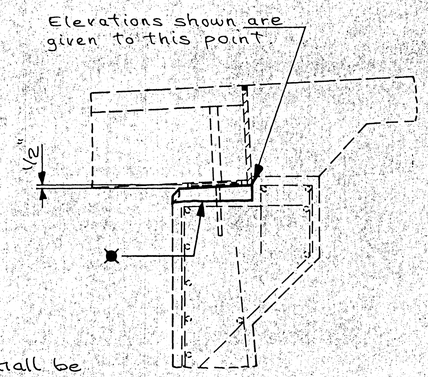

SECTION E-E

Note: Cost of Substructure Repairs shall be incidental to "Class X Concrete".

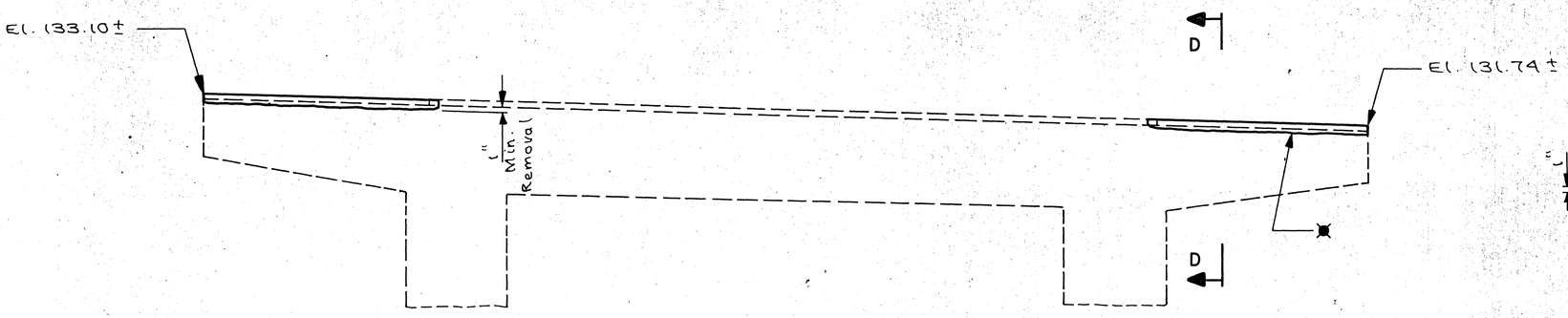

ELEVATION OF EAST APPROACH PIER
(Looking West)

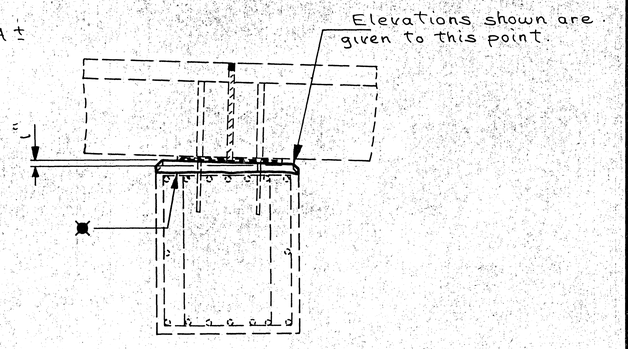

SECTION D-D

SUBSTRUCTURE REPAIR

No.	Revision	By	Date

Scale N.A.
Date Apr. 20 1983
Designer: P.Z.
Drafter: LEN
Checker: P.Z.
Approver: JRL

Donohue
Engineers & Architects

MORGAN STREET BRIDGE
REHABILITATION
CITY OF ROCKFORD M F T

Project No 11381.000

10

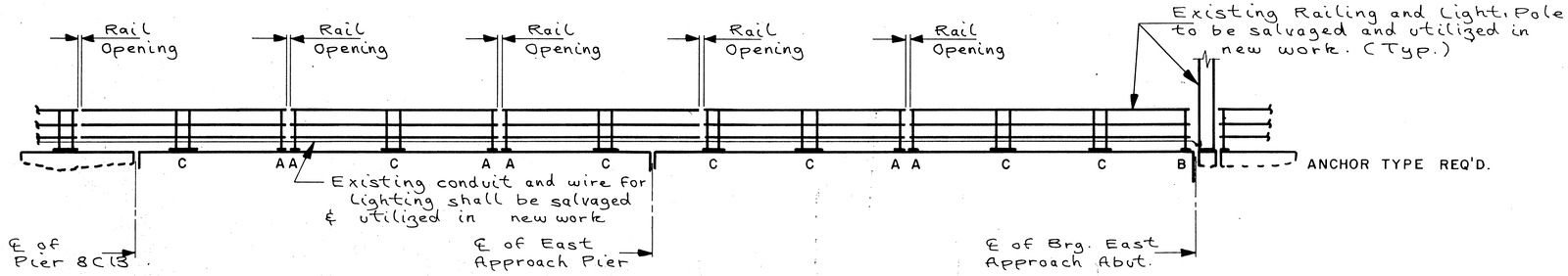

NORTH RAILING

Note: Contractor shall record location of existing anchor assemblies prior to removing existing superstructure.

Note: Salvaging and reattaching the existing railing shall be incidental to "Removal of Existing Superstructures".

ELEVATION OF RAILING IN EAST APPROACH SPANS

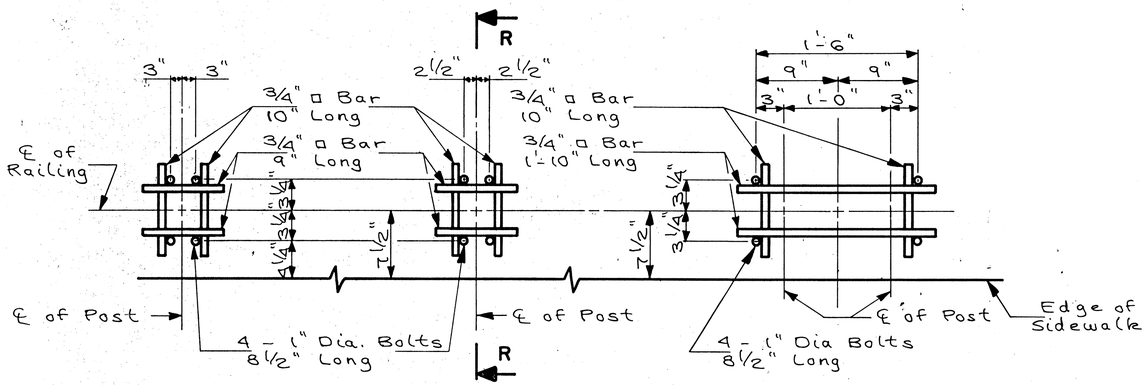

TYPE A **TYPE B** **TYPE C**

RAIL POST ANCHOR DETAILS

Note: The bars are welded to the 1" dia bolts.

Note: Rail Post Anchor Assemblies shall be incidental to "Class X Concrete".

TABLE J

Location	No. Reqd.	Anchor Type
	North	Rail
Pier 1	——	——
Pier 2	1	C
Pier 3	1	C
Pier 4	1	C
Pier 5	1	C
Pier 6	1	C
Pier 7	——	——
New East Approach Spans	6	A
	1	B
	7	C

Type	Total
A	6
B	1
C	12

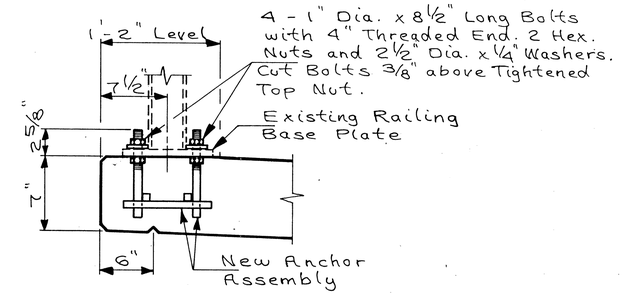

SECTION R

NORTH RAILING DETAILS

Donohue
Engineers & Architects

MORGAN STREET BRIDGE REHABILITATION
CITY OF ROCKFORD M F T

Scale N. A.
Date Apr. 20 1983
Designer P. Z.
Drafter L.E.N.
Checker P. Z.
Approved R.L.

No	Revision	By	Date

Project No 11381.000
Line No
Sheet No 11

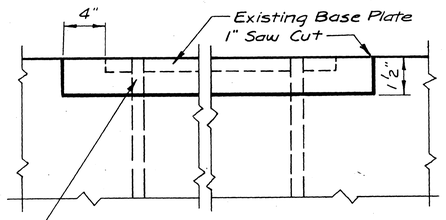

EXISTING ANCHOR BOLTS

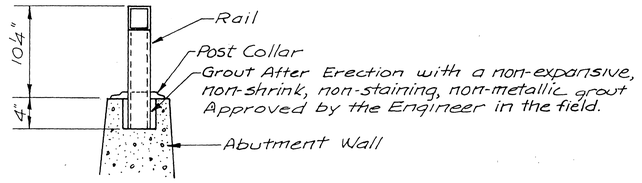

SECTION THRU HANDRAIL

NOTES

Hollow Structural Steel Tubing Shall Conform to the Requirements of ASTM. Designation A-500 Grade B Structural Steel Tubing

All Other Steel Shapes Shall Conform to the Requirements of AASHTO Designation M-183.

Machine Screws Shall Confirm to the Requirements of ASTM Designation A-307, and Shall Be Galvanized.

All Posts, Railing, Rail Splices and Anchor Devices Shall Be Galvanized After Shop Fabrication in Accordance with AASTO Designation M-111 and ASTM A-385. Galvanized Rails Shall Not Be Painted.

Railing Shall Be In Accordance with Section 508 of the Standard Specifications, Except as Noted, and Shall Be Paid For At the Contract Unit Price Per Lineal Foot For "Furnishing and Erecting Steel Railing."

All Welds Shall Be In Accordance with the AWS Std. Specs.

Railing Measured for Payment Along Top Rail and Includes Single Rail Units At Each Abutment.
Anchor Devices Shall be Included in the cost of the railing.

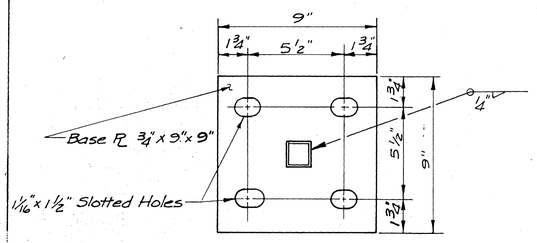

PLAN

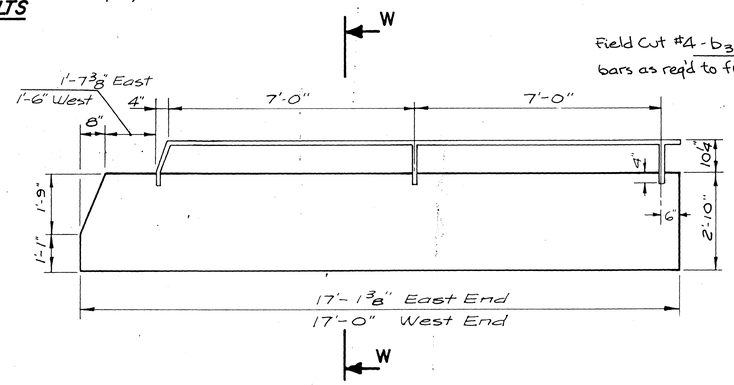

HANDRAIL DETAILS

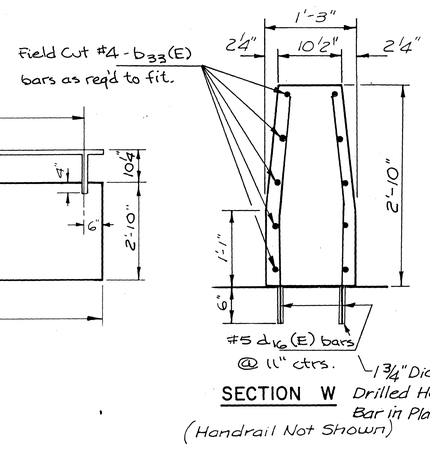

SECTION W
(Handrail Not Shown)

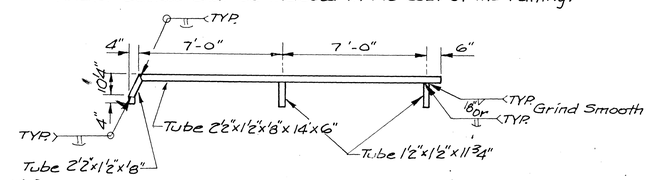

RAIL DETAIL AT ABUTMENTS

1 Reqd. Each Abut.

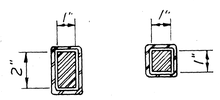

SECTION A-A

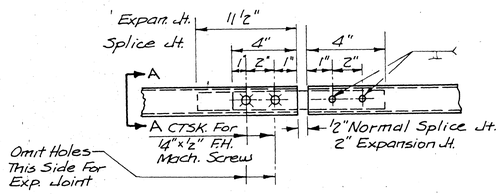

SPLICE DETAILS

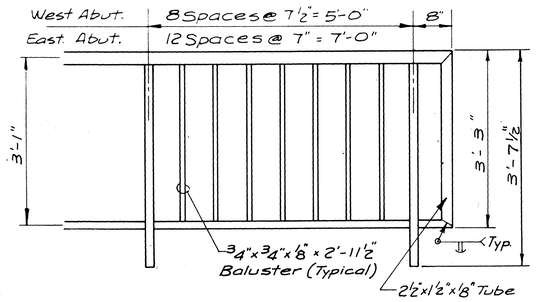

TYPICAL END AT ABUTMENT

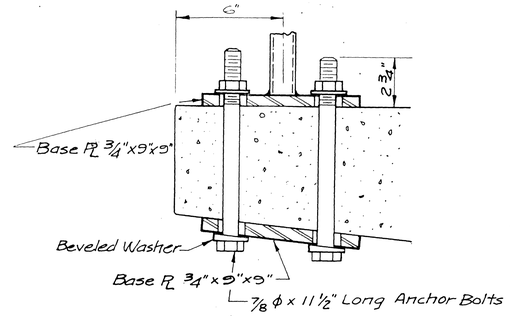

SECTION AT EDGE OF SLAB
NEW RAIL ANCHORAGE
(South Sidewalk Only)

BILL OF MATERIAL

ITEM	TOTAL
Furnishing and Erecting Steel Railing L.F.	957

Note:
Splice Joints Shown On Shop Plans to Be Approved By The Engineer Prior To Fabrication.

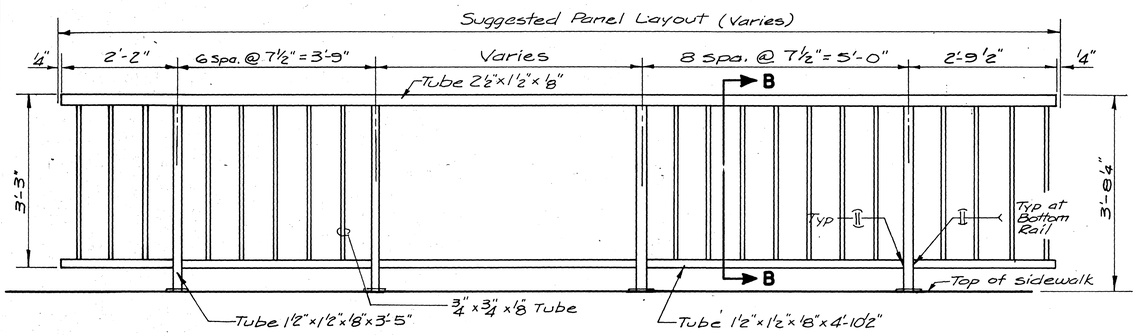

TYPICAL PANEL

Note:
Expansion Joint In Rail To Be Placed At Bridge Joints. See Sheet 13 & 14 For Layout of Bridge Joints.

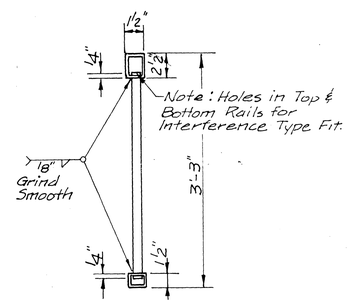

BALUSTER
SEC. B-B

SOUTH RAILING DETAILS

Donohue
Engineers & Architects

Scale N.A.
Date Apr. 20 1983
Designer P.Z.
Drafter L.E.N.
Checker P.Z.
Approved R.L.

MORGAN STREET BRIDGE
REHABILITATION
CITY OF ROCKFORD M F T

Project No 11381.000

12

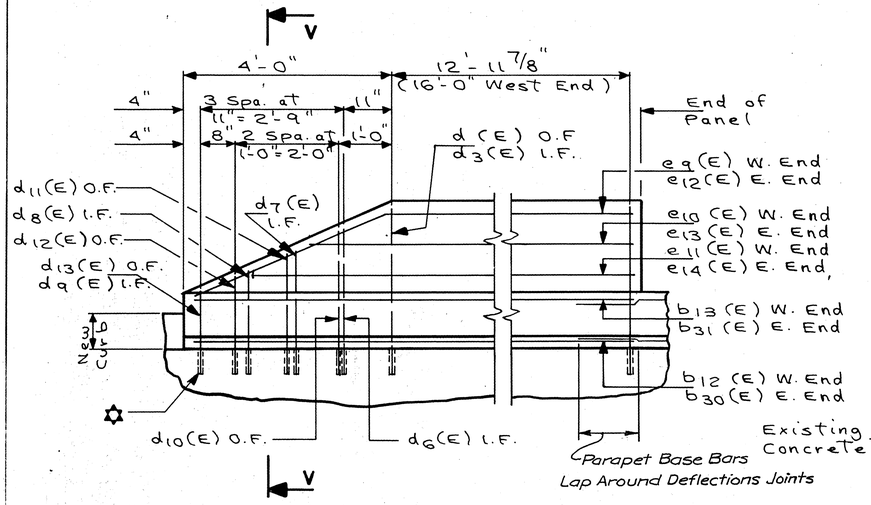

DETAIL V

TERMINATION ENDS OF PARAPET
(East End Shown - West End Similar)

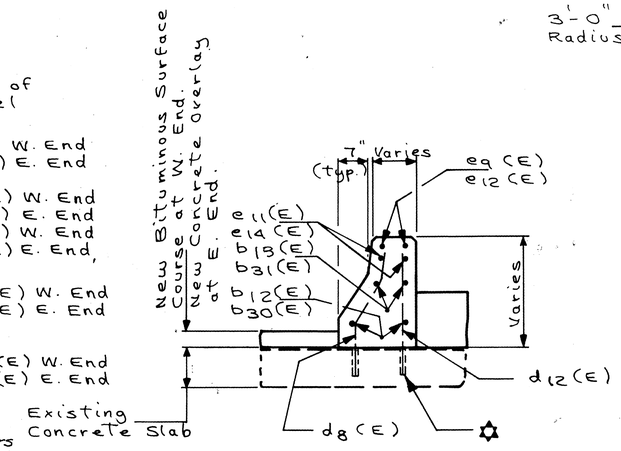

SECTION V

✡ 1¾" Dia x 6" Deep Drilled Hole - Grout Bar In Place with Epoxy (Typ.)

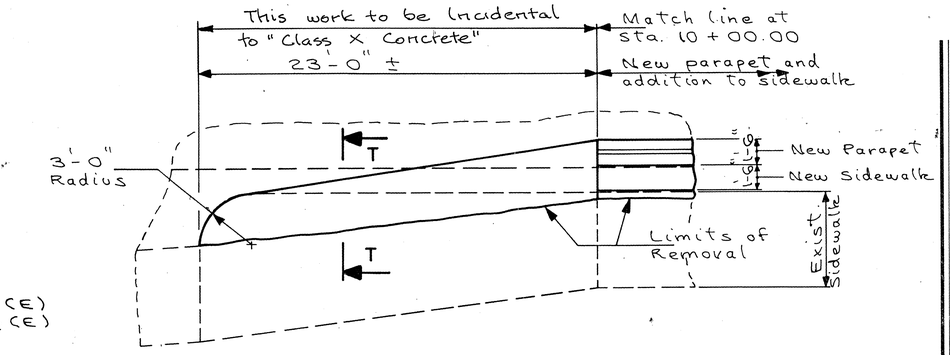

DETAIL S

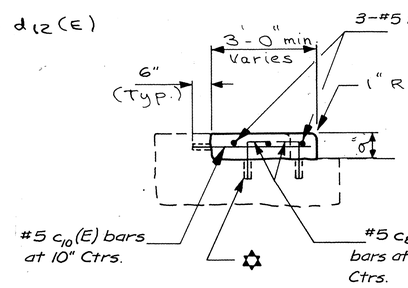

SECTION T-T

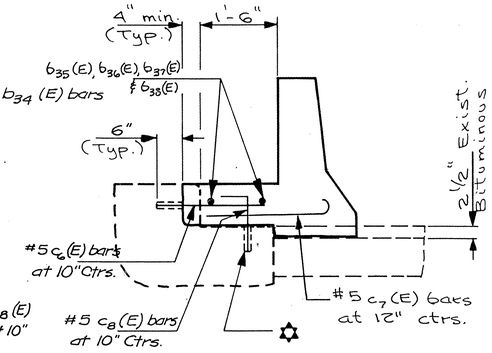

SECTION S-S

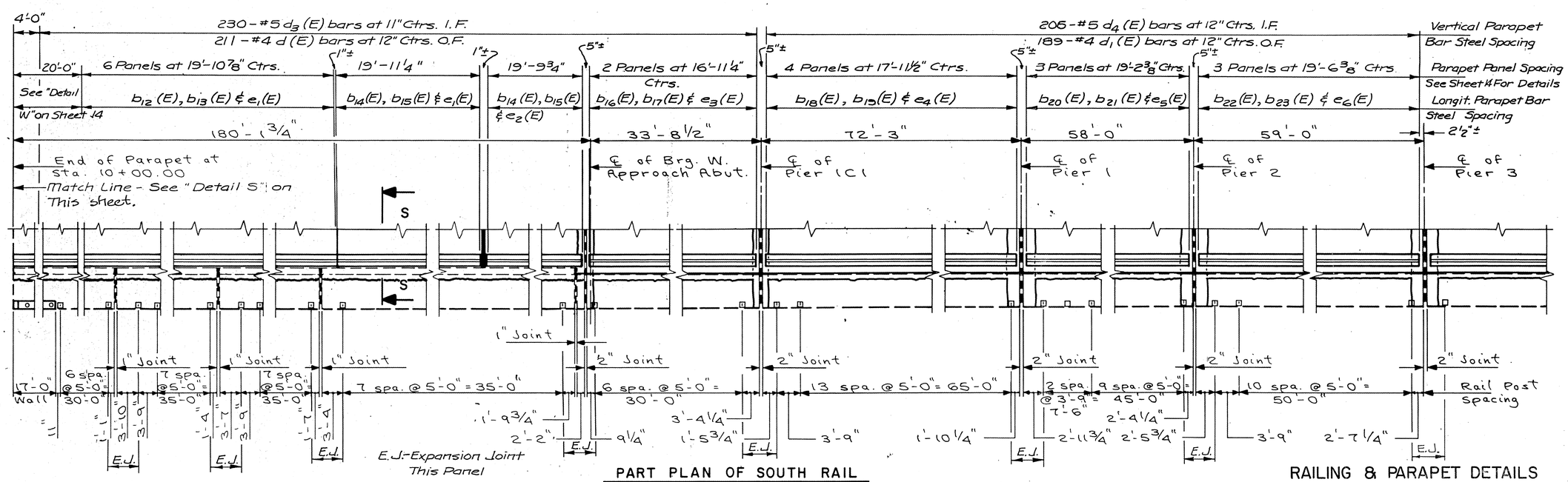

PART PLAN OF SOUTH RAIL

RAILING & PARAPET DETAILS

Scale: N. A.
Date: Feb. 2020
Designer: P. Z.
Drafter: L.E.N.
Checker: P. Z.
Approved: R.L.

Donohue
Engineers & Architects

MORGAN STREET BRIDGE
REHABILITATION
CITY OF ROCKFORD MFT

Project No. 11381.000

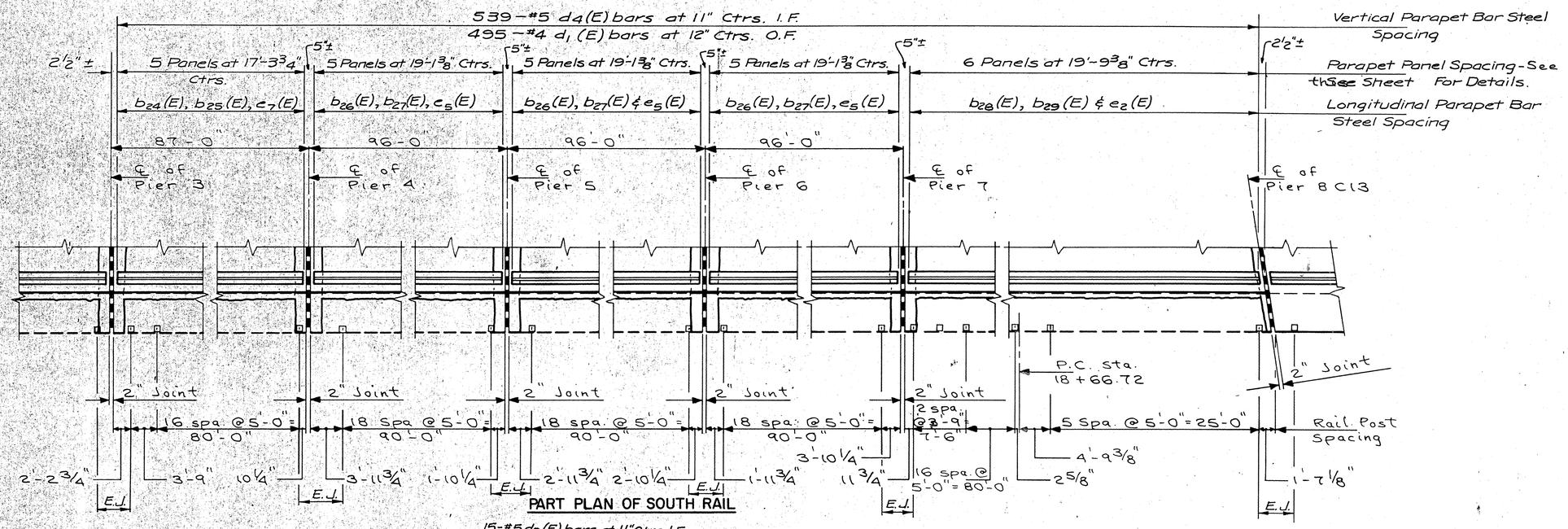

PART PLAN OF SOUTH RAIL

E.J. - Expansion Joint This Panel

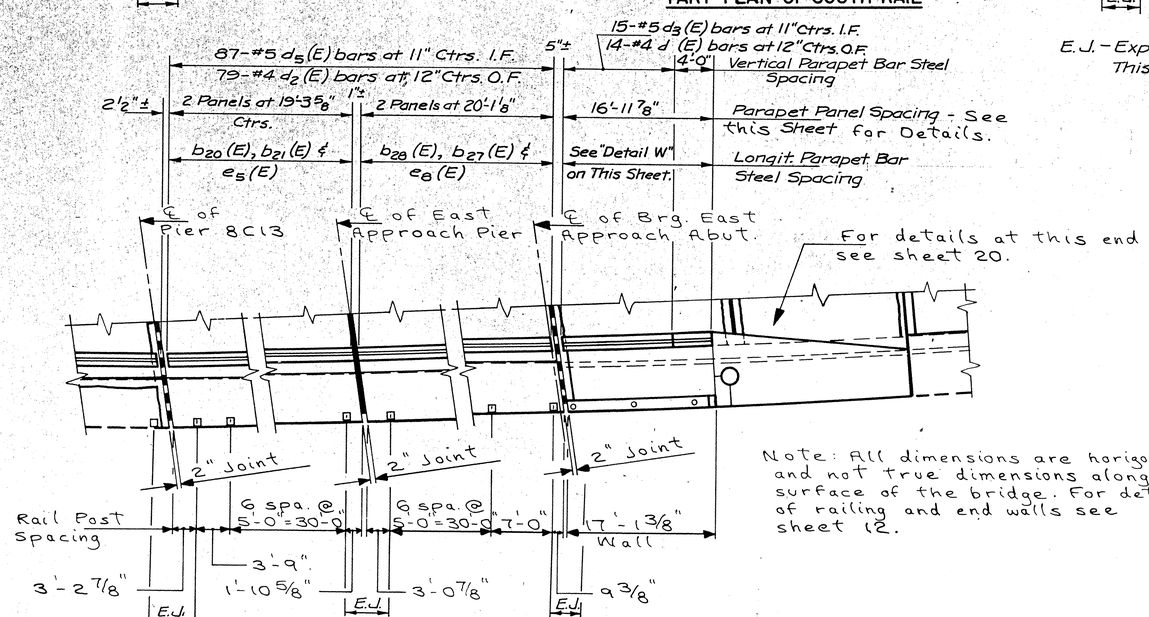

PART PLAN OF SOUTH RAIL

E.J. - Expansion Joint This Panel

Note: All dimensions are horizontal and not true dimensions along surface of the bridge. For details of railing and end walls see sheet 12.

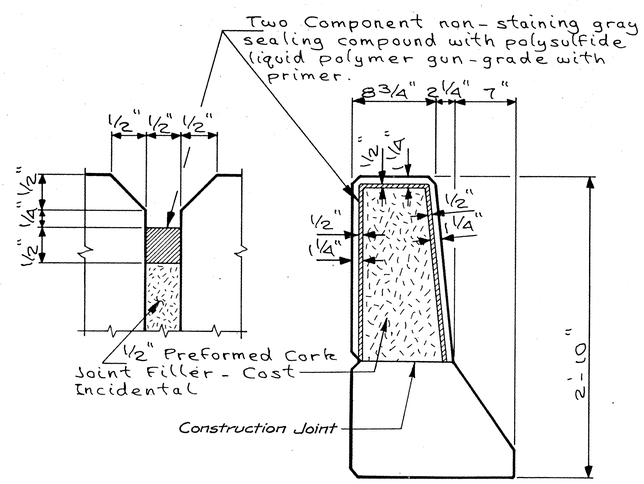

DETAIL OF PARAPET JOINT

RAILING PARAPET DETAILS

Donohue
Engineers & Architects

Scale N.A.
Date 1-23-20
Designed P.Z.
Drafter LEN
Checker P.Z.
Approved RL

No. | Revision | By | Date

MORGAN STREET BRIDGE REHABILITATION
CITY OF ROCKFORD MFT

Project No. 11381.000

14

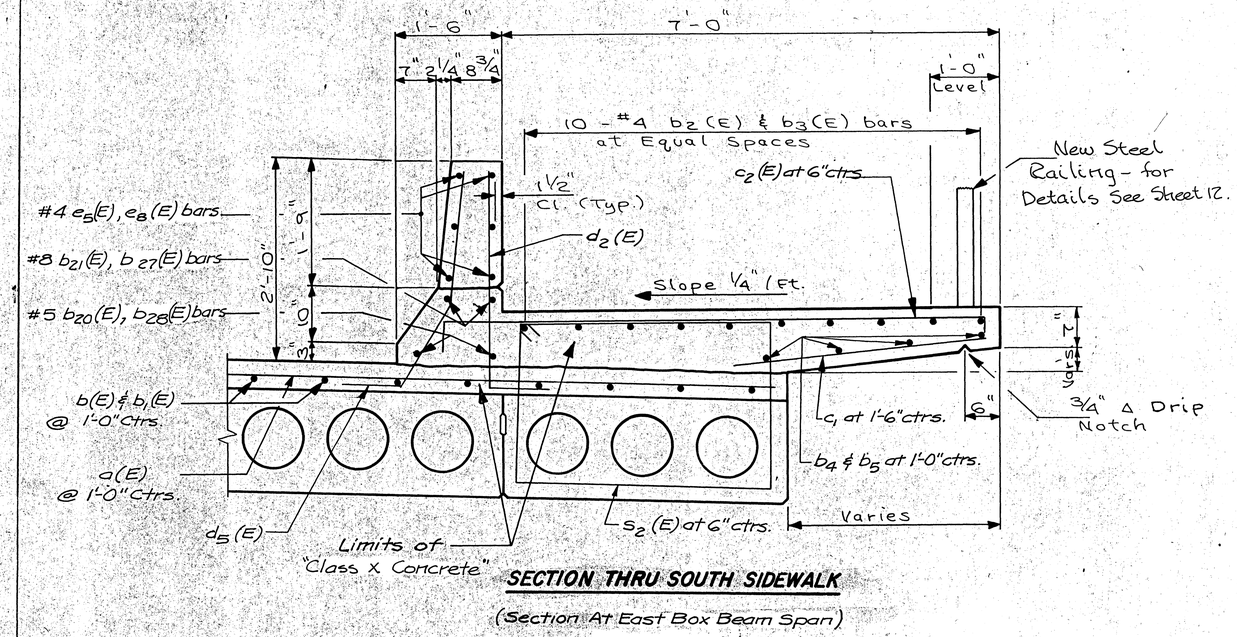

SECTION THRU SOUTH SIDEWALK

(Section At East Box Beam Span)

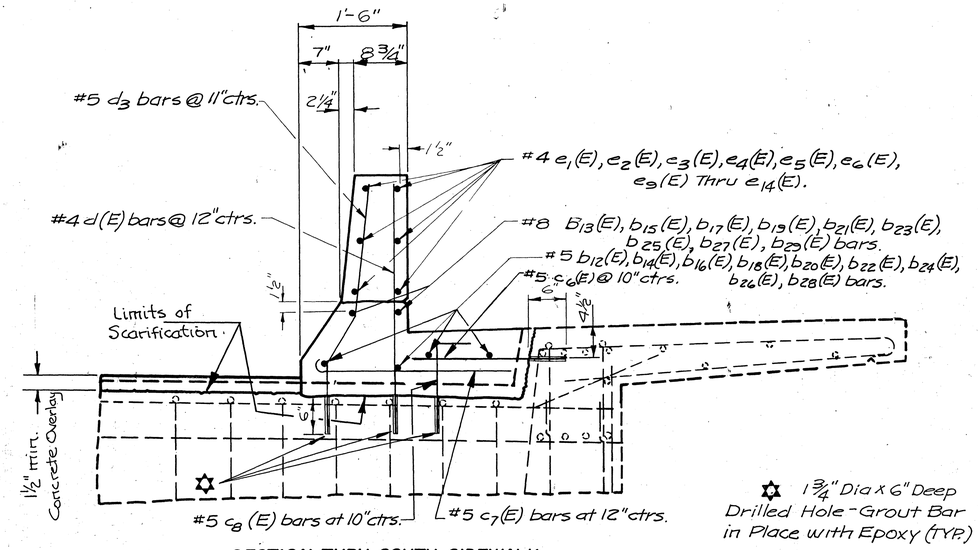

SECTION THRU SOUTH SIDEWALK

(Section At Floor Beam - West Box Beam Span & West Approach Similar)

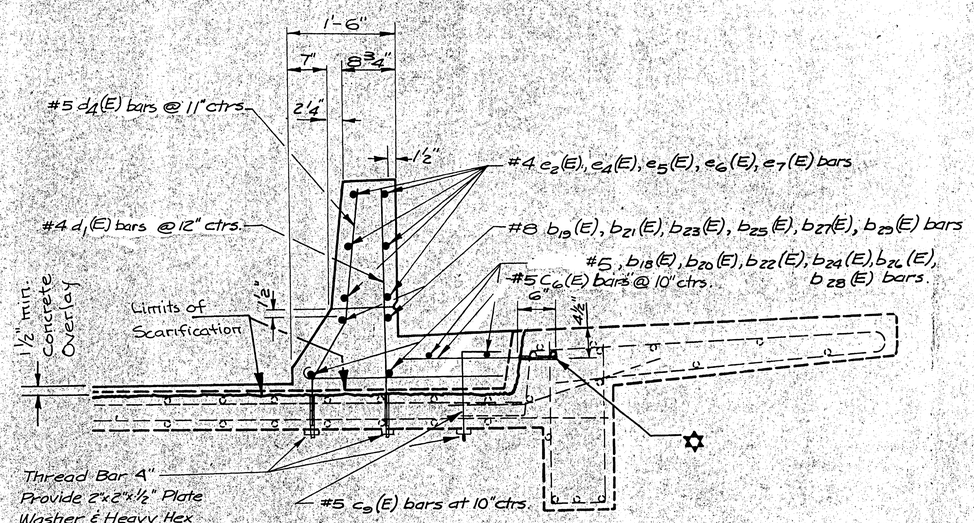

SECTION THRU SOUTH SIDEWALK

(Section Between Floor Beams)

PARAPET & SIDEWALK DETAILS

Donohue
Engineers & Architects

Scale N.A.
Date Feb 20
Designed P.Z.
Drafter L.E.N.
Checker P.Z.
Appr. over RL

MORGAN STREET BRIDGE
REHABILITATION
CITY OF ROCKFORD M F T

Project No. 11381.000
File No.
Sheet No. 15

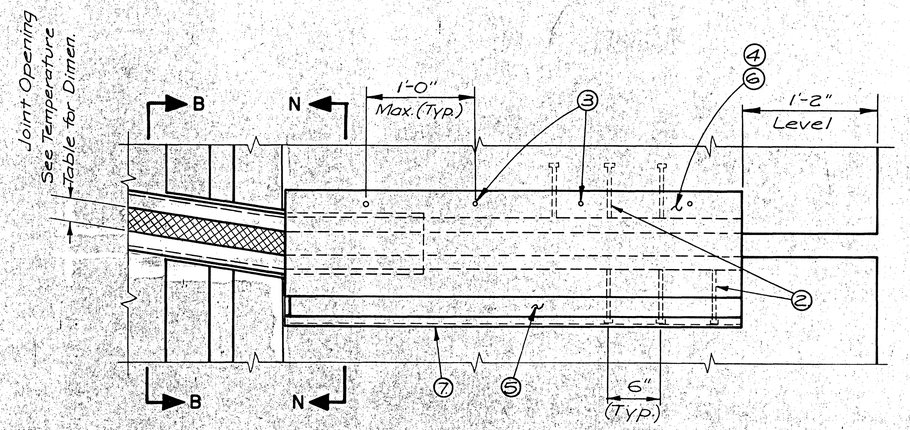

PLAN AT SOUTH SIDEWALK
(Pier 8C13 and East Approach Abut.)

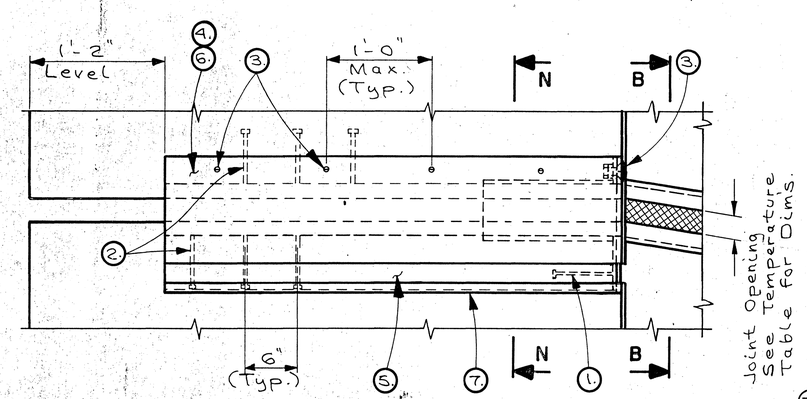

PLAN AT NORTH SIDEWALK
(Pier 8C13 and East Approach Abut.)

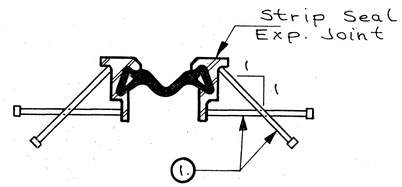

SECTION B

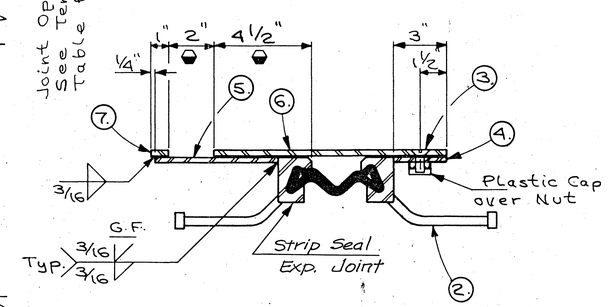

SECTION N

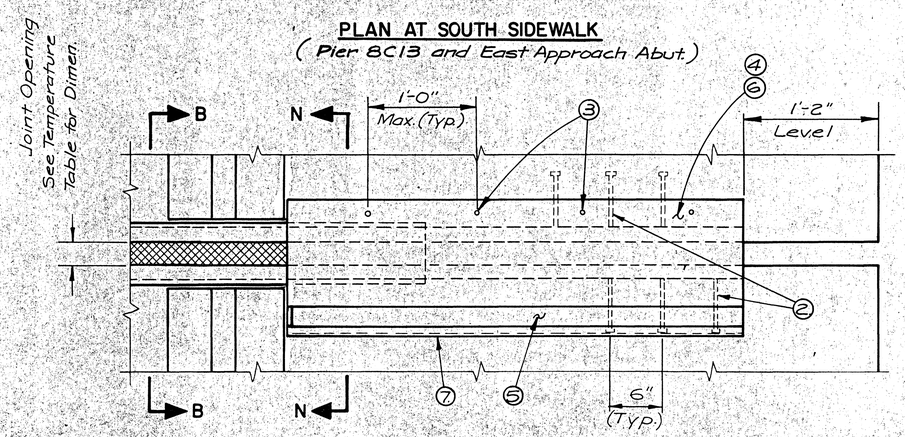

PLAN AT SOUTH SIDEWALK
(Typical)

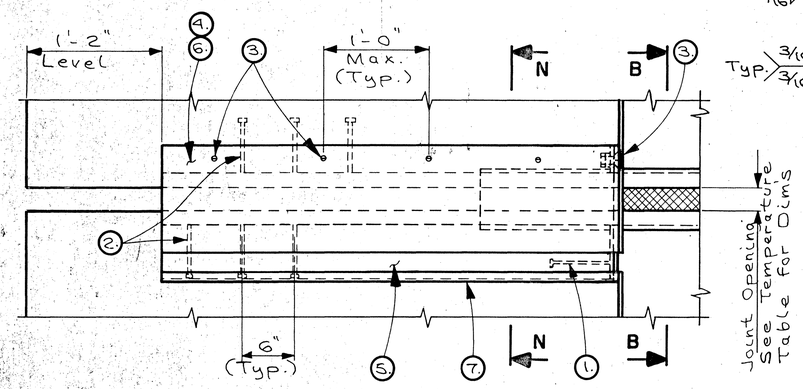

PLAN AT NORTH SIDEWALK
(Typical)

Shaded Underside Deck Temperature (°F.) | Joint Opening (Inches)

90°	1 3/4"
80°	1 13/16"
70°	1 7/8"
60°	1 15/16"
50°	2"
40°	2 1/16"
30°	2 1/8"

TEMPERATURE TABLE

- Dimensions are Given For 50° F.
- Block Out Concrete 2" Each Side of Joint Opening.

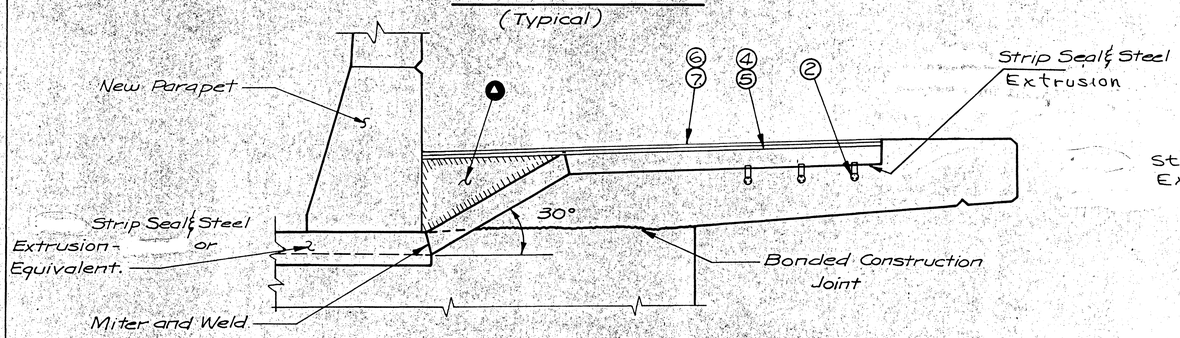

SECTION AT SOUTH SIDEWALK

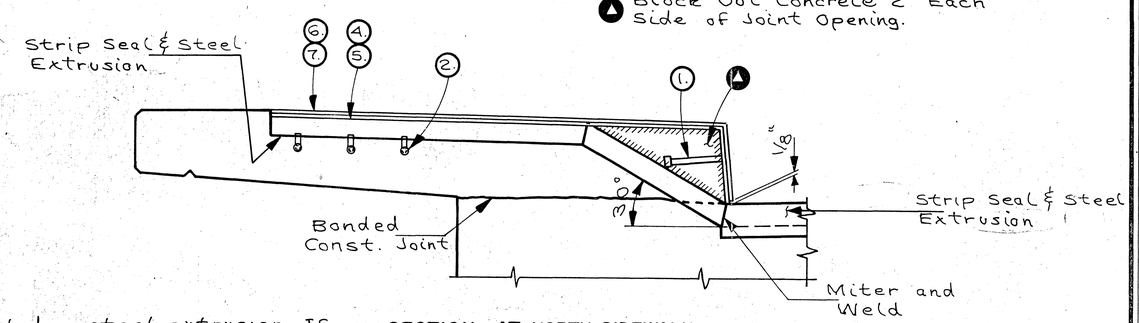

SECTION AT NORTH SIDEWALK

LEGEND

1. Studs 5/8" Dia. x 6 3/8" Long at 6" Alternate Centers Weld to Steel Extrusion where shown.
2. Studs 5/8" Dia. x 6 3/8" Long at 6" Centers. Weld to Steel Extrusion where shown. Bend as Shown.
3. 3/4" Dia. Countersunk Stainless Steel Bolt and Hexagon Head Nut. Weld Nut to No. 4. Provide Nut with 1" Deep Plastic Cap over Nut to keep Concrete from Bolt Cavity.
4. Bar 3" x 3/8" - Limits Shown. Bend as Shown. Cut to clear Block Out. Weld to Steel Extrusion as shown. Provide Holes for No. 3.
5. Bar 3/8" - Limits Shown. Bend as Shown. Cut to clear Block Out. Weld to Steel Extrusion as shown.
6. Plate 3/8" - Limits Shown. Bend as Shown. Provide Countersunk Holes for No. 3.
7. Bar 1" x 3/8" - Limits Shown. Bend as Shown. Weld to No. 5 as Shown.

JOINT NOTES

One field splice permitted in steel extrusion. If used, details shall be submitted for approval. No splicing permitted in Neoprene Strip Seal.

Sand blast clean steel extrusions prior to coating with lubricant adhesive for Neoprene Strip Seal.

Strip seal expansion joint assembly, including anchor studs and hardware will be included in the bid items "Joint Reconstruction - Arch Spans" and "Joint Reconstruction - Approach Spans".

Strip seal expansion joint details are shown for 0° skew which applies to nine of the eleven joints. The Joints at Pier 8C13 and the East Approach Abutment must be adjusted for the 9°-06'-17" skew. Shop drawings shall show all details for joints and adjustments that are required to meet the Engineers approval.

See Sheet 6 For Details of barsteel reinforcement in box out.

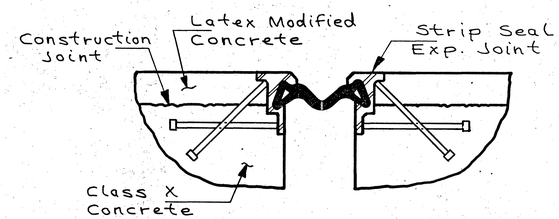

CONCRETE PLACEMENT AT PIERS 1 THRU 7

EXPANSION JOINT

No	Revision	By	Date

Scale N.A.
Date Apr. 20 1983
Designer P.Z.
Drafter L.E.N.
Checker P.Z.
Approved R.L.

Donohue
Engineers & Architects

MORGAN STREET BRIDGE REHABILITATION
CITY OF ROCKFORD M F T

Project No. 11381.000
File No.
Sheet No. 16

BILL OF MATERIAL

Bar Mark	No. Req'd.	Size	Length	Shape
a (E)	164	#4	22-10	
a1	180	#6	22-4	
a2	12	#5	22-10	
b (E)	90	#4	20-2	
b1 (E)	90	#4	21-0	
b2 (E)	36	#4	20-8	
b3 (E)	36	#4	21-6	
b4	16	#4	20-2	
b5	16	#4	21-0	
b6	168	#5	2-3	
b7	420	#5	3-3	
b12 (E)	14	#5	21-4	
b13 (E)	14	#8	23-1	
b14 (E)	4	#5	19-5	
b15 (E)	4	#8	19-5	
b16 (E)	8	#5	17-9	
b17 (E)	4	#8	18-9	
b18 (E)	16	#5	19-2	
b19 (E)	8	#8	20-8	
b20 (E)	20	#5	20-3	
b21 (E)	10	#8	21-7	
b22 (E)	12	#5	20-7	
b23 (E)	6	#8	21-11	
b24 (E)	20	#5	18-7	
b25 (E)	10	#8	20-2	
b26 (E)	60	#5	20-5	
b27 (E)	34	#8	22-0	
b28 (E)	32	#5	21-2	
b29 (E)	12	#8	22-10	
b30 (E)	2	#5	16-6	
b31 (E)	2	#8	16-6	
b32 (E)	14	#8	11-0	
b33 (E)	20	#4	16-4	
b34 (E)	3	#5	25-6	
b35 (E)	2	#5	28-6	
b36 (E)	8	#5	22-10	
b37 (E)	4	#5	20-11	
b38 (E)	2	#5	1-10	
c (E)	160	#5	5-4	
c1	110	#4	4-3	
c2 (E)	160	#5	8-7	
c3	52	#6	8-6	
c4	104	#4	4-9	
c5	52	#6	7-7	
c6 (E)	1125	#5	2-2	
c7 (E)	954	#5	3-4	
c8 (E)	507	#5	1-9	
c9 (E)	674	#5	1-11	
c10 (E)	28	#5	3-3	
d (E)	225	#4	3-2	
d1 (E)	684	#4	3-8	
d2 (E)	79	#4	4-0	
d3 (E)	245	#5	3-6	
d4 (E)	745	#5	3-8	
d5 (E)	87	#5	4-2	
d6 (E)	2	#5	3-2	
d7 (E)	2	#5	2-8	
d8 (E)	2	#5	2-3	
d9 (E)	2	#5	2-0	
d10 (E)	2	#4	2-9	
d11 (E)	2	#4	2-3	
d12 (E)	2	#4	1-10	
d13 (E)	2	#4	1-6	
d14 (E)	28	#4	3-1	
d15 (E)	28	#5	3-1	
d16 (E)	76	#5	3-2	

BILL OF MATERIAL (CONTINUED)

Bar Mark	No. Req'd.	Size	Length	Shape
e1 (E)	42	#4	19-7	
e2 (E)	42	#4	19-5	
e3 (E)	12	#4	16-7	
e4 (E)	24	#4	17-7	
e5 (E)	120	#4	18-9	
e6 (E)	18	#4	19-2	
e7 (E)	30	#4	16-11	
e8 (E)	12	#4	19-9	
e9 (E)	2	#4	20-0	
e10 (E)	2	#4	17-4	
e11 (E)	2	#4	18-8	
e12 (E)	2	#4	16-11	
e13 (E)	2	#4	14-3	
e14 (E)	2	#4	15-7	
s	86	#4	5-5	
s1 (E)	160	#4	9-6	
s2 (E)	160	#4	11-11	
s3	86	#4	8-7	
Class X Concrete			Cu. Yds.	234
Reinforcement Bars			Lbs.	11,290
Reinforcement Bars (Epoxy Coated)			Lbs.	40,620

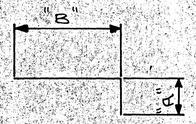

Bar Mark	"A"	"B"
b6	8	1-7
b7	8	2-7
c (E)	4	5-0
c5	1-0	6-7
c8 (E)	6	1-3
c9 (E)	6	1-5
d2 (E)	1-0 1/2	2-11 1/2
d14 (E)	9	2-4

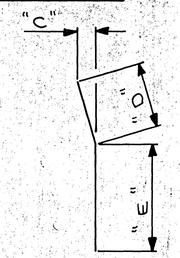

Bar Mark	"C"	"D"	"E"
b34 (E)	4	2-6	23-0
d9 (E)	6 1/2"	1-1	11"
d16 (E)	2 3/8	1-10	1-4
e9 (E)	1-8 1/2	4-2	15-10
e12 (E)	1-8 1/2	4-2	12-9

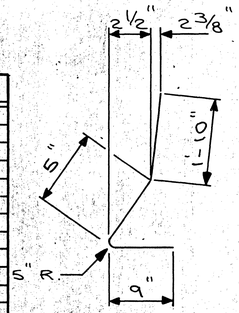

d15 (E) bar

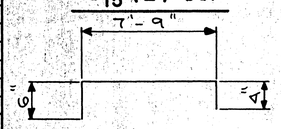

C2 (E) bar

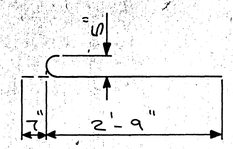

C7 (E) bar

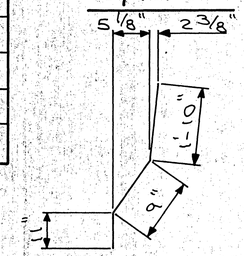

d3 (E) bar

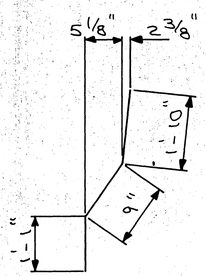

d4 (E) bar

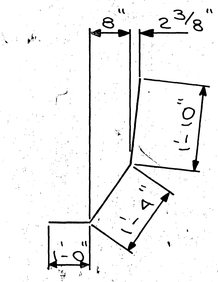

d5 (E) bar

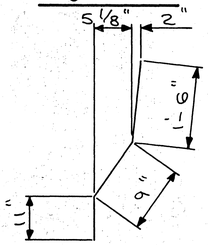

d6 (E) bar

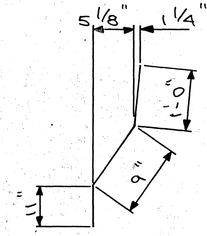

d7 (E) bar

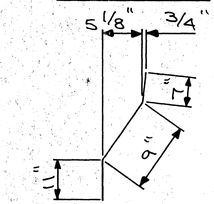

d8 (E) bar

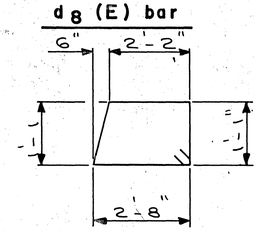

S1 (E)

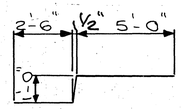

C3 bar

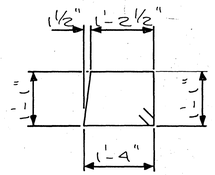

S bar

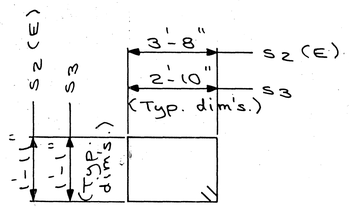

S2 (E) bar & S3 bar

TABLE OF PAVEMENT ELEVATIONS

Station	North Gutter	7 1/2' N. of ℄	℄	7 1/2' S. of ℄	South Gutter
18+00.72	130.03	130.27	130.35	130.27	130.09
18+10	130.31	130.55	130.63	130.57	130.42
18+20	130.61	130.85	130.93	130.89	130.77
18+30	130.91	131.15	131.23	131.21	131.12
18+40	131.21	131.45	131.53	131.53	131.47
18+50	131.51	131.74	131.82	131.85	131.84
18+60	131.81	132.03	132.12	132.16	132.18
18+70	132.11	132.31	132.42	132.47	132.52
18+80	132.41	132.60	132.71	132.78	132.87
18+90	132.69	132.87	132.99	133.09	133.21
19+00	132.94	133.14	133.28	133.40	133.55
19+10	133.16	133.39	133.55	133.71	133.88
19+20	133.37	133.64	133.82	134.01	134.21
19+30	133.59	133.89	134.09	134.29	134.52
19+32.72	133.65	133.96	134.16	134.36	134.59
19+40	133.84	134.15	134.35	134.55	134.78
19+50	134.09	134.40	134.60	134.80	135.03
19+60	134.34	134.65	134.85	135.05	135.28
19+70	134.58	134.89	135.09	135.29	135.52
19+80	134.81	135.12	135.32	135.52	135.75
19+90	135.06	135.35	135.55	135.75	135.97
19+94.62	135.19	135.46	135.65	135.84	136.05

Note: Begin S.E. transition at Sta 18+00.72 - S.E. attained at Sta. 19+32.72 - Superelevate about the ℄ - Resume S.E. transition at Sta. 19+84.15.

Donohue
Engineers & Architects

Scale N.A.
Date Apr. 20 1983
Designer P.Z.
Drafter LEN
Checker P.Z.
Approved JRL

No | Revision | By | Date

MORGAN STREET BRIDGE
REHABILITATION
CITY OF ROCKFORD M F T

Project No 11381.000

BAR STEEL DETAILS

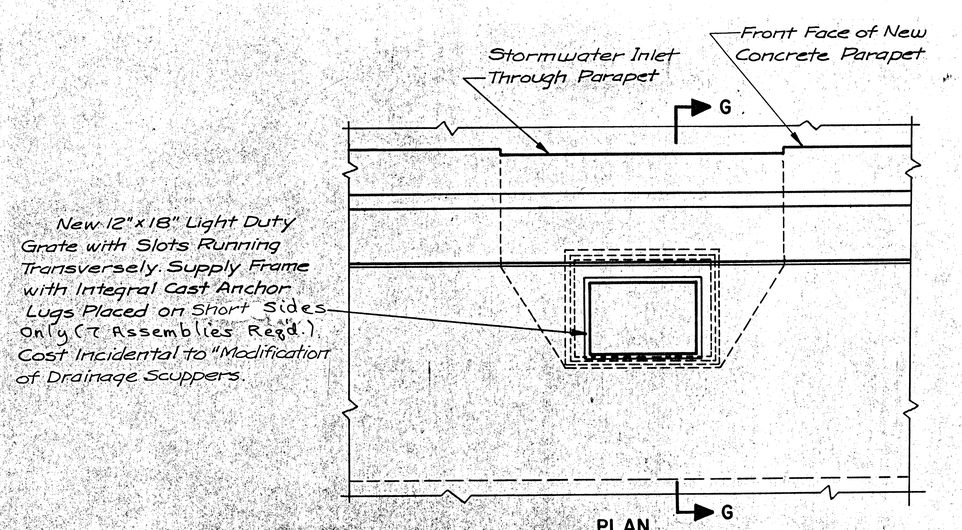

PLAN

Plan of South Sidewalk Drains (7 Drains)

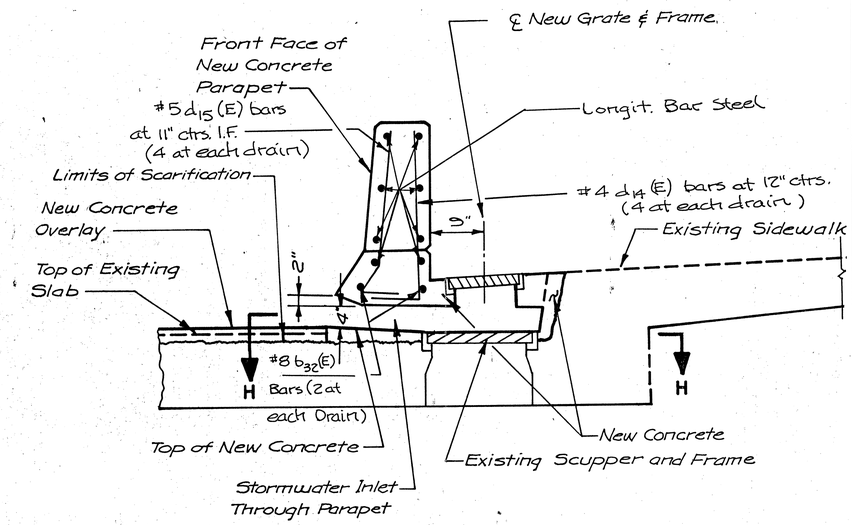

SECTION G

Note: d14 (E) & d15 (E) bars shall replace d(E) Thru d5 (E) bars in Drain Areas where required.
Field cut bar steel as req'd. to clear drain details by 1½" min.

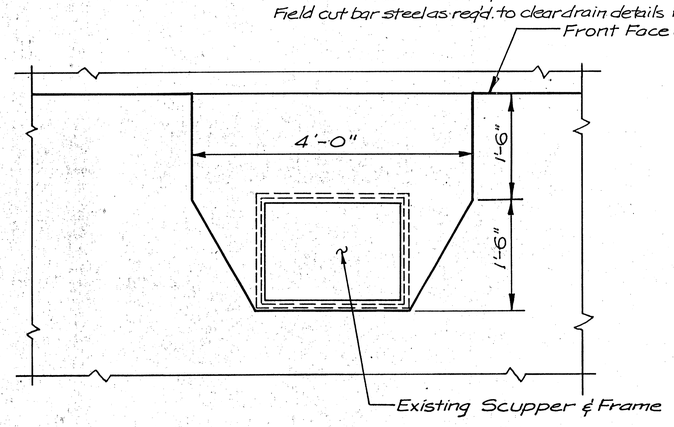

SECTION H

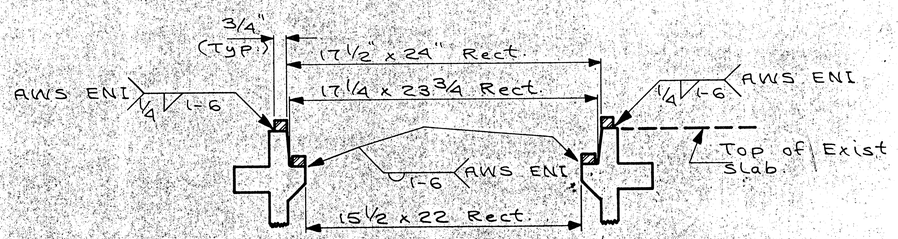

TYP. SECTION THRU EXIST. CASTING

Fabricate Frame from ½" x ¾" Bars. Use Coor Alloy 101 (AWS ENI) Electrode or equal. Weld on to existing casting as shown above.

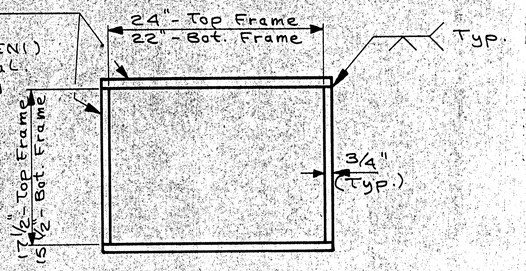

FRAME PLAN

SCUPPER MODIFICATION DETAILS

Frames shall be fabricated for 15 drains. (One frame of each size per drain required.) An additional drain in the East Approach (North curb at Sta. 20 + 10 ±) shall not be modified. The new Concrete Overlay shall be sloped as required to taper into the frame.

DRAIN DETAILS

Donohue
Engineers & Architects

Scale N.A.
Date Apr. 20 1983
Designer P.Z.
Drafter LEN
Checker P.Z.
Approved RL

No	Revision	By	Date

MORGAN STREET BRIDGE REHABILITATION
CITY OF ROCKFORD M F T

Project No 11381.000
File No
Sheet No 18

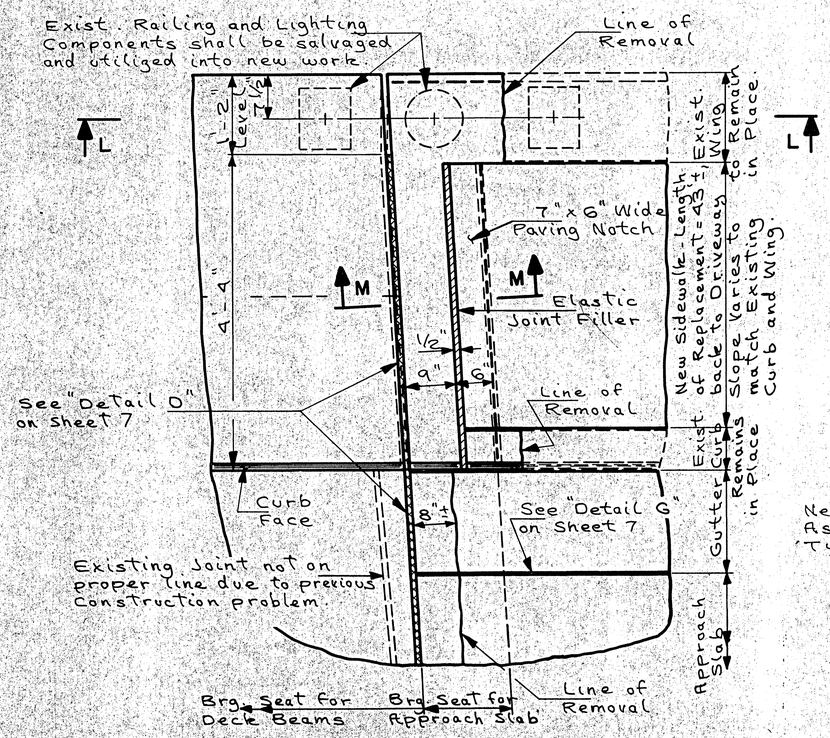

DETAIL L-L

Note: Sidewalk cover plates are not shown. See "Section M" for Details. (At North End of East Approach Abutment - Looking North)

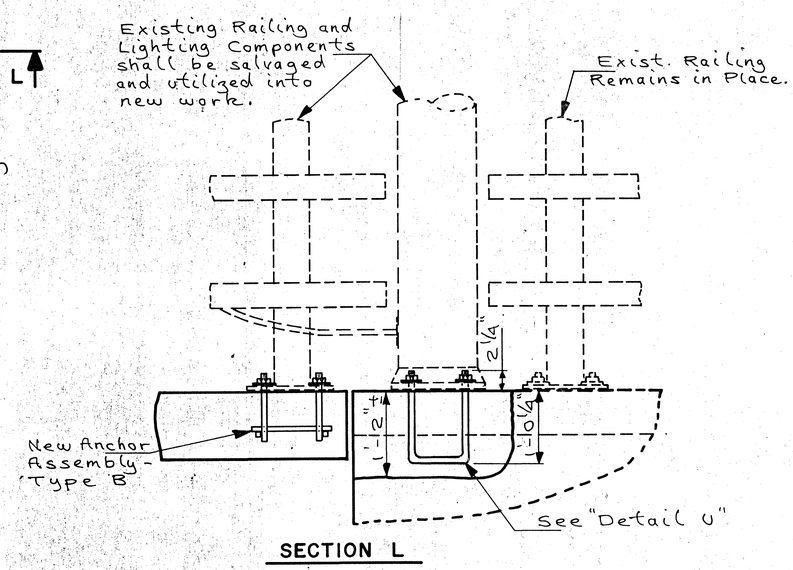

SECTION L

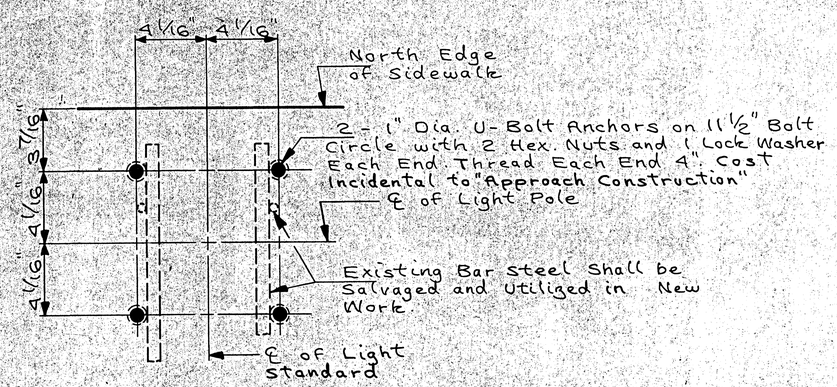

DETAIL U

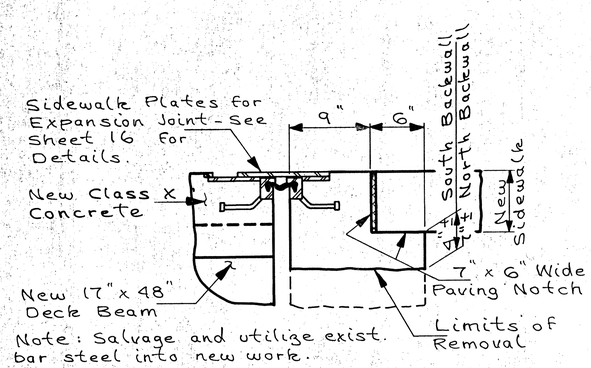

Note: Salvage and utilize exist. bar steel into new work.

SECTION M

EAST APPROACH ABUTMENT DETAILS

Donohue
Engineers & Architects

Scale: N.A.
Date: Rev. 20
Designer: P.Z.
Drafter: LEN
Checker: P.Z.
Approver: JRC

No	Revision	By	Date

MORGAN STREET BRIDGE REHABILITATION
CITY OF ROCKFORD M F T

Project No. 11381.000

File No.

Sheet No. 19

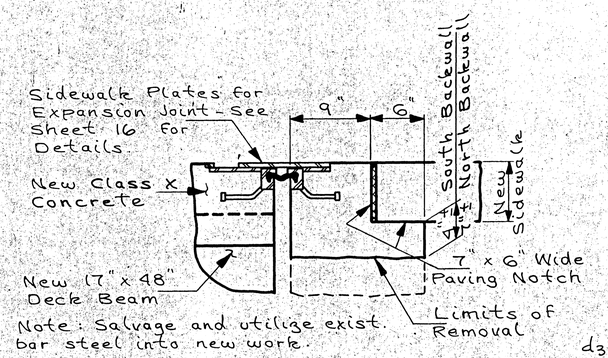

SECTION M

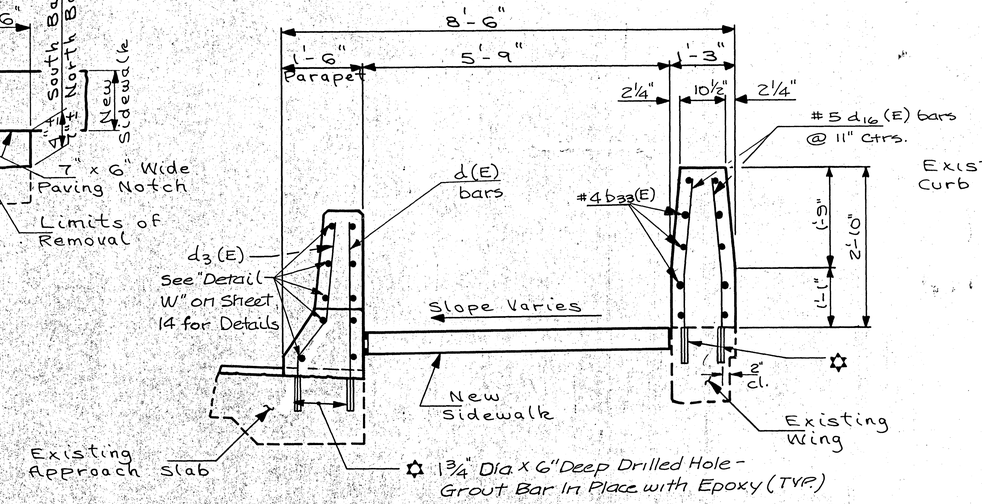

SECTION N-N

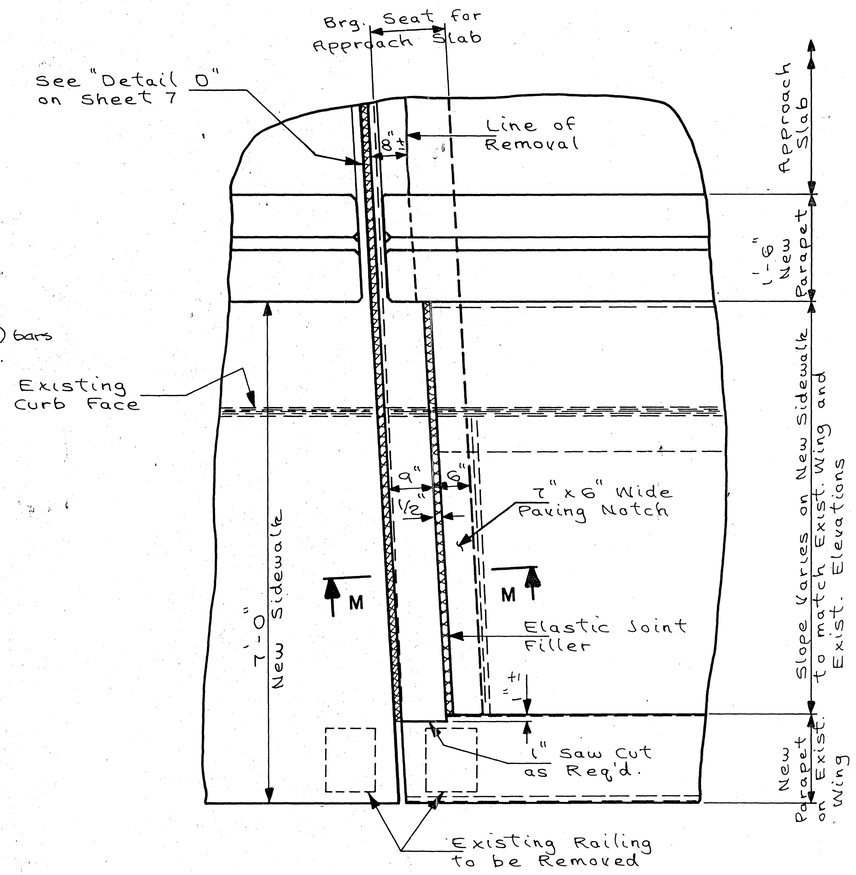

DETAIL M-M

Note: Sidewalk cover plates are not shown. See "Section M" for Details. (Looking North)

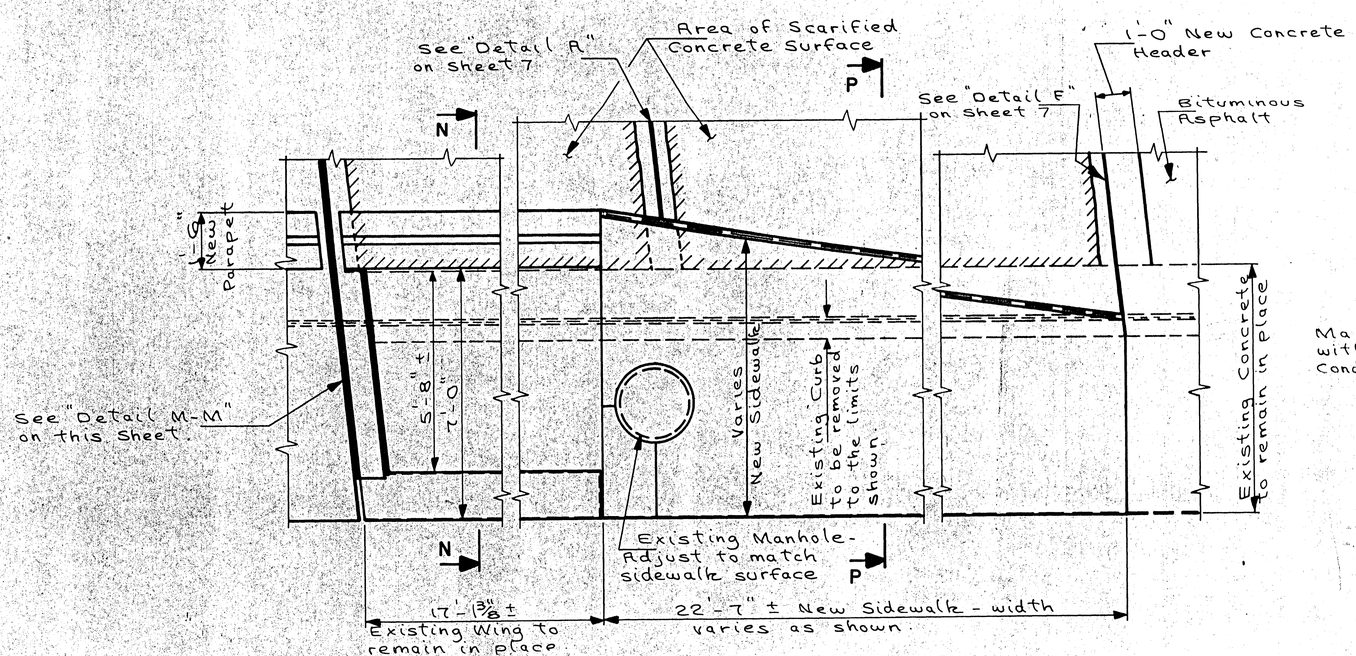

PLAN OF THE SOUTHEAST SIDEWALK

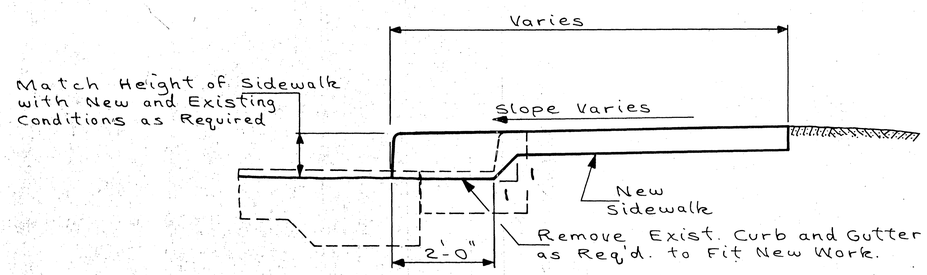

SECTION P-P

EAST APPROACH ABUTMENT DETAILS

Donohue
Engineers & Architects

Scale N.A.
Date Apr. 20 1983
Designer P.Z.
Drafter LEN
Checker P.Z.
Approved RL

MORGAN STREET BRIDGE REHABILITATION
CITY OF ROCKFORD MFT

Project No. 11381 000

20

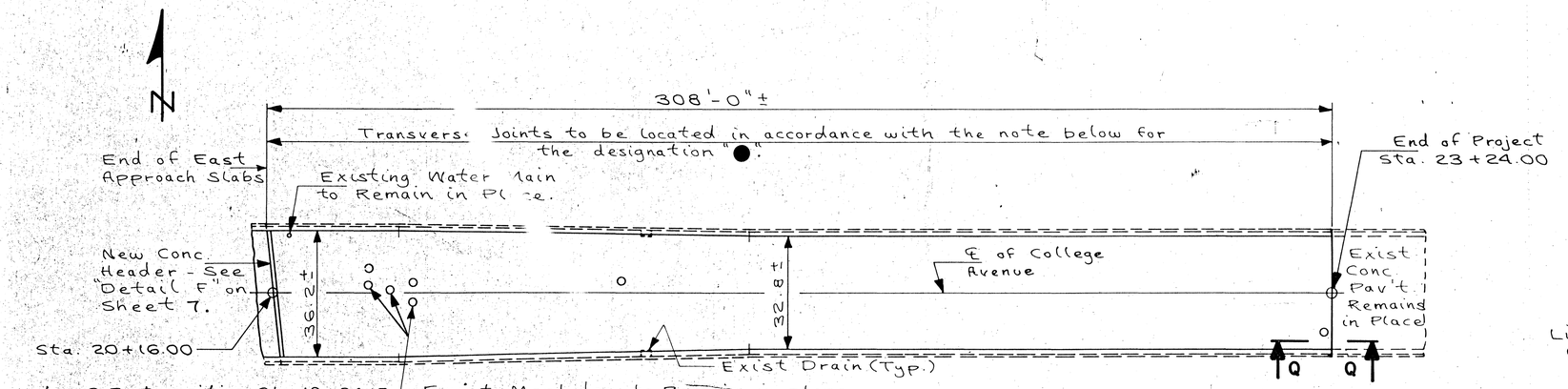

PLAN OF EAST APPROACH

Note:
The joint designated (▲) shall be constructed in the location shown, centered about the existing surface crack aligned with the ends of the existing bridge railing.
Joints designated (●) shall be located after the existing bituminous concrete surface has been removed, to align with a major existing transverse crack in the Portland Cement concrete base.

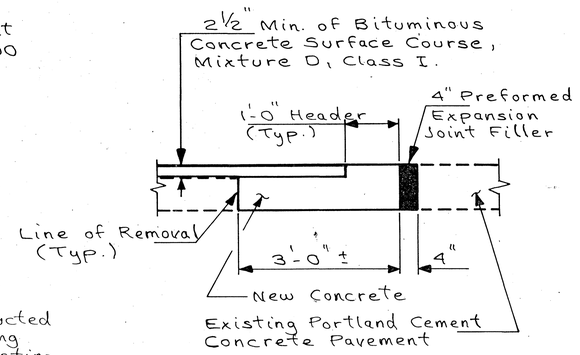

SECTION Q

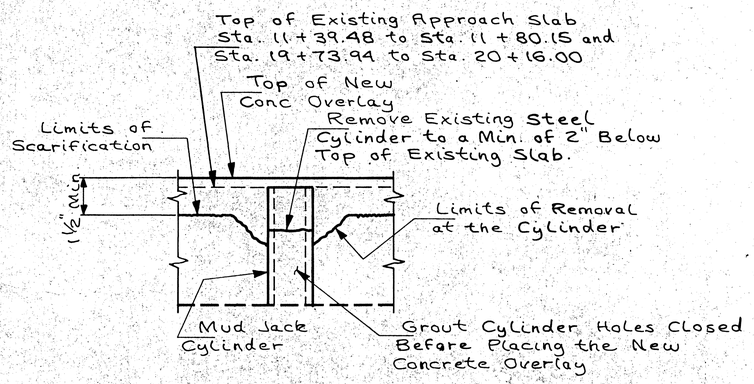

MUD JACK CYLINDER DETAILS

Total Cylinders to be Closed Equals 60.
The Cost of this work shall be incidental to the bid item "Approach Construction".

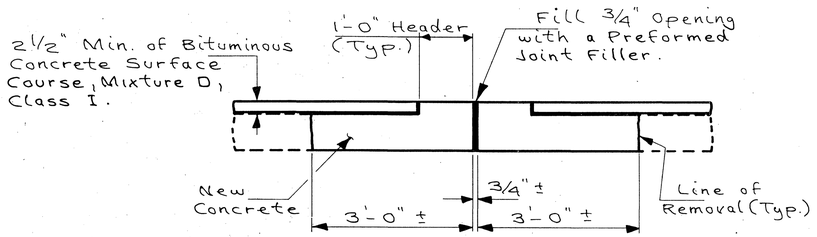

SECTION T

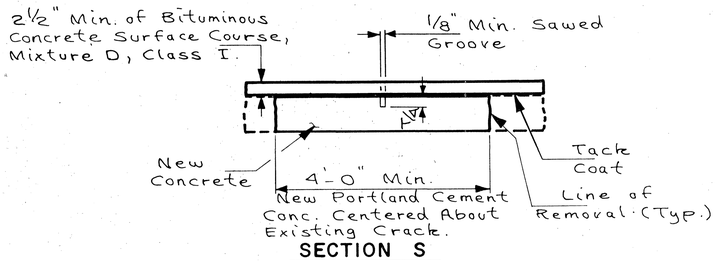

SECTION S

"T" = thickness of new concrete.

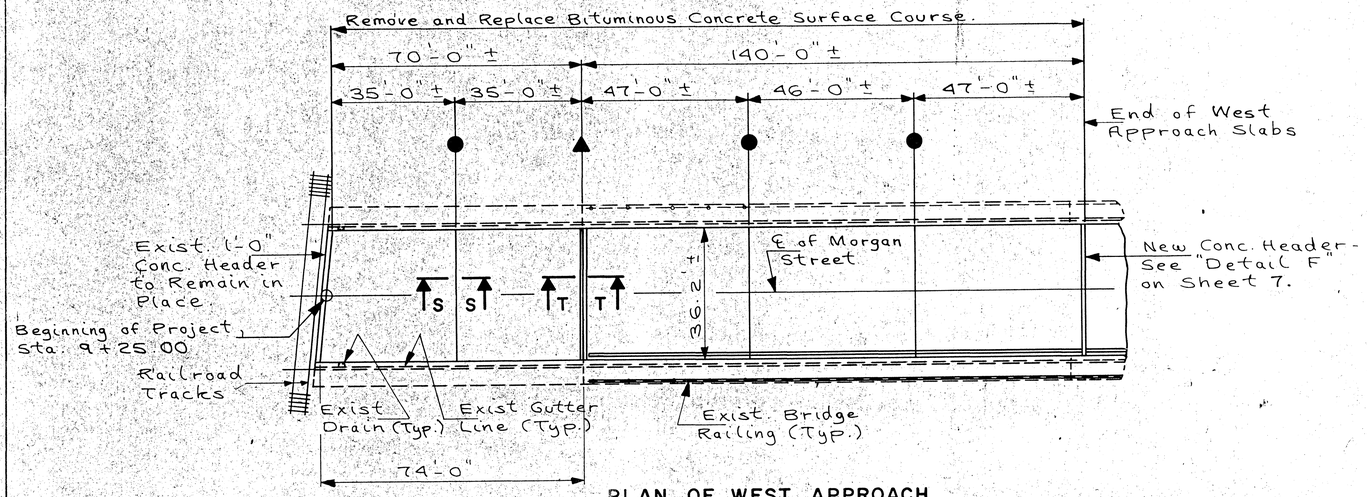

PLAN OF WEST APPROACH

APPROACH DETAILS

Donohue
Engineers & Architects

Scale N.A.
Date Aug. 30
Designer P.Z.
Drafter L.E.N.
Checker P.Z.
Approved R.L.

MORGAN STREET BRIDGE
REHABILITATION
CITY OF ROCKFORD M F T

Project No. 11381.000